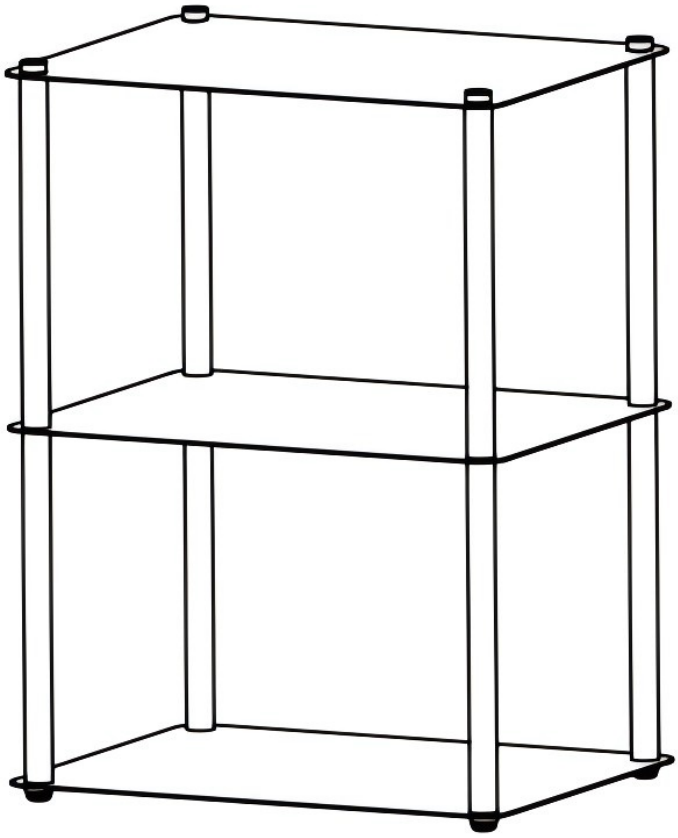

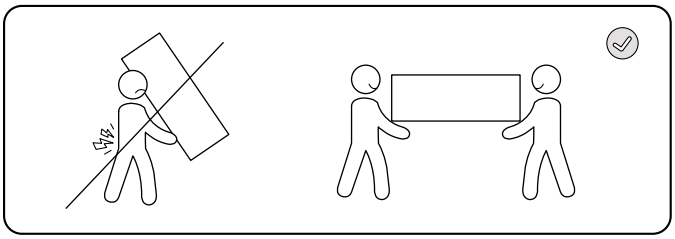

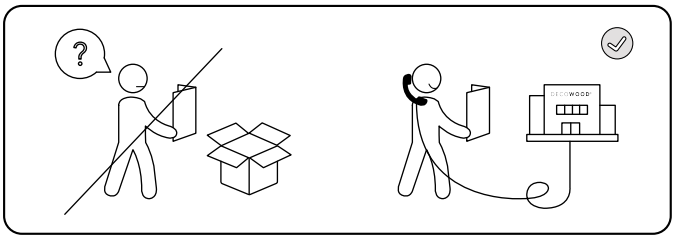

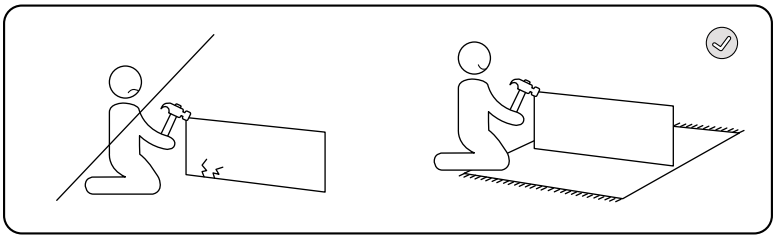

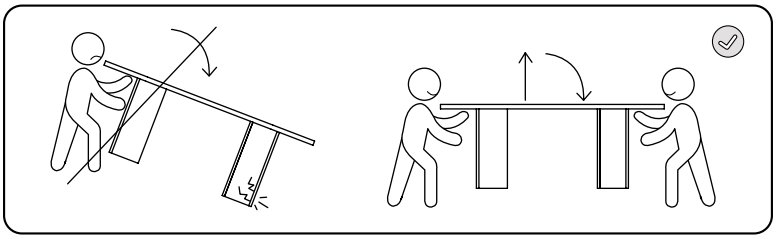

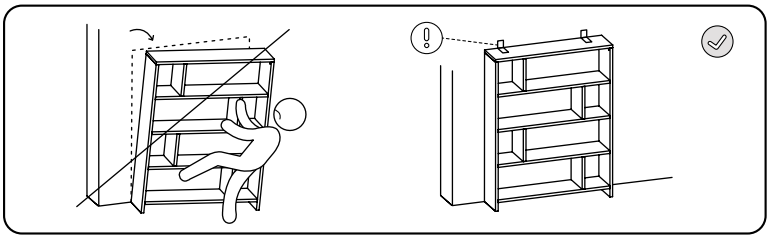

8 min

x1

A	B	C	D	E
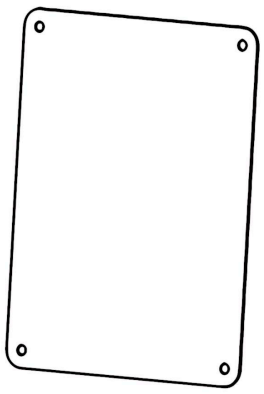	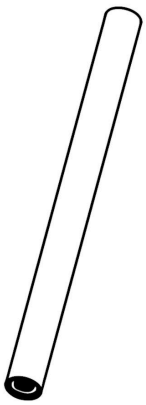		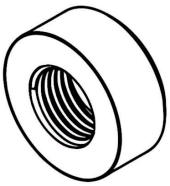	
3	8	12	4	4

1

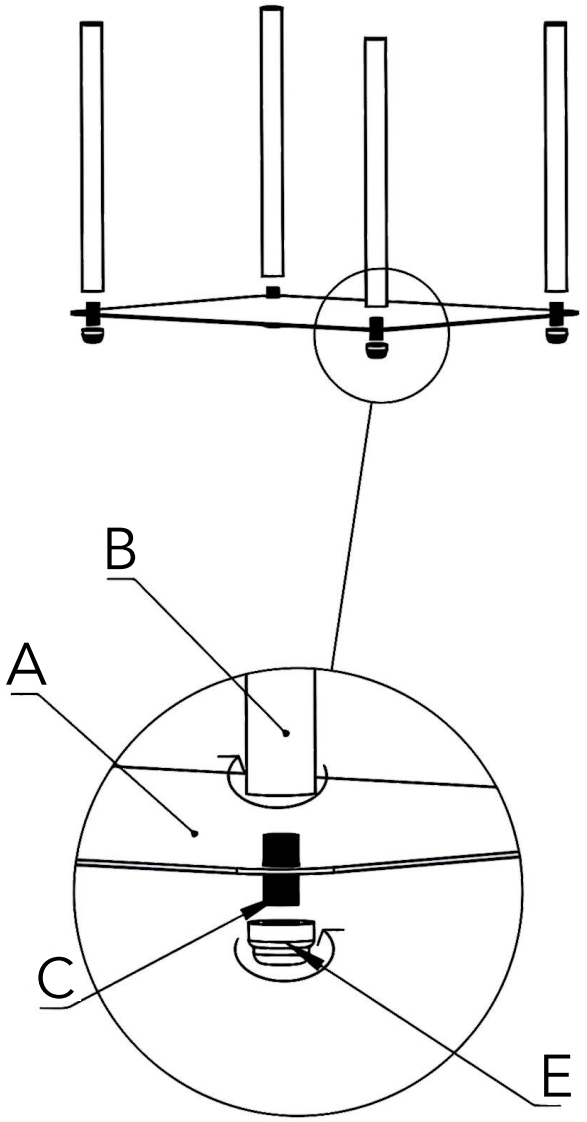

2

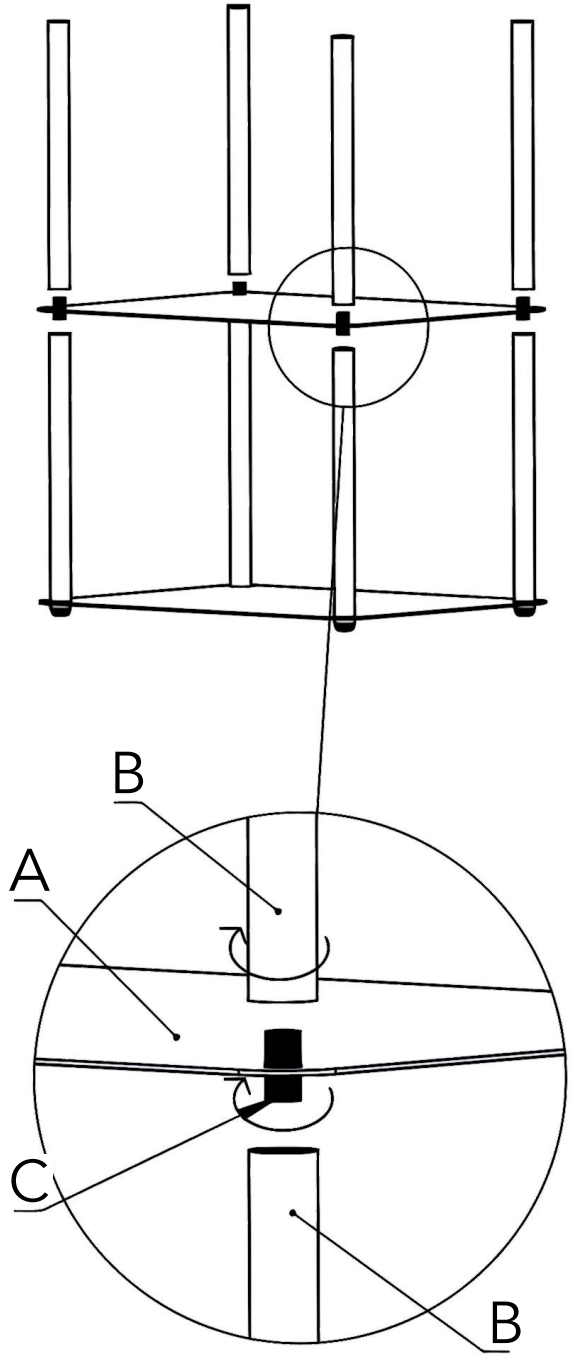

3

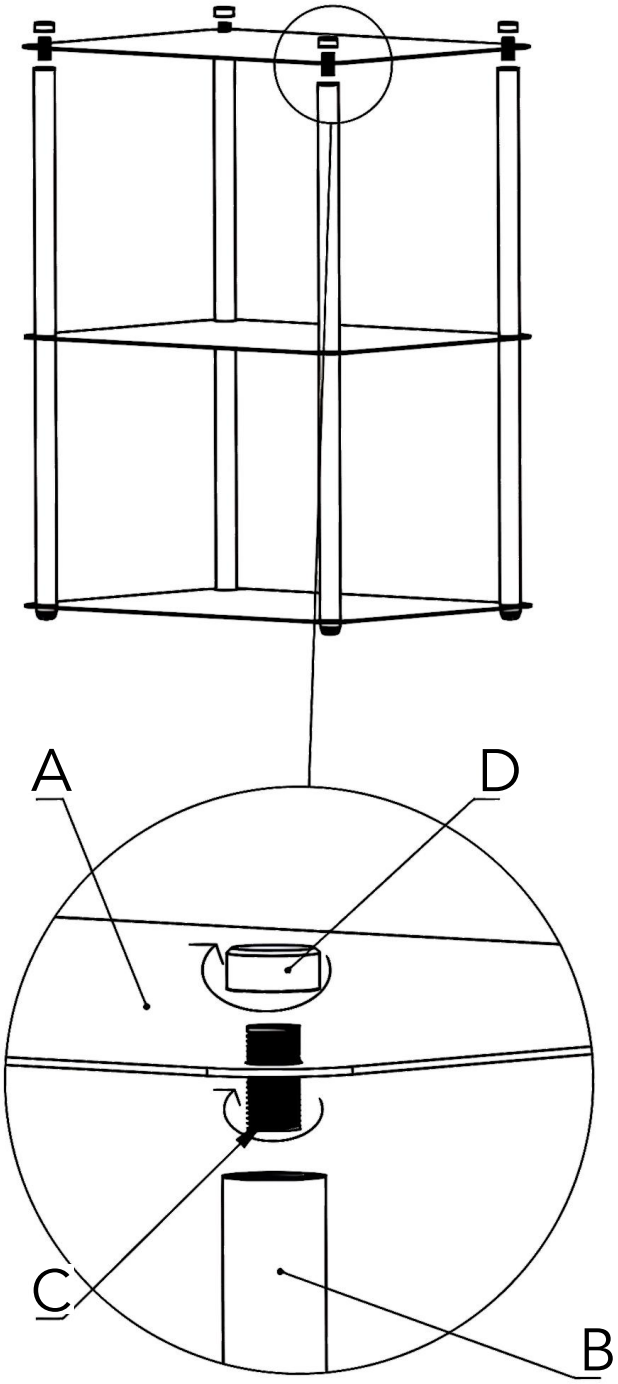

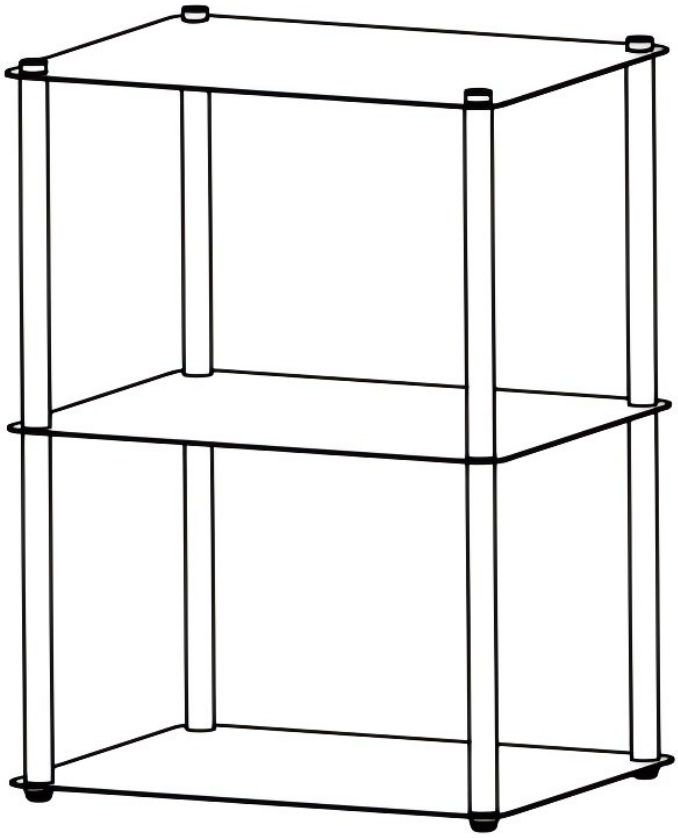

DECOWOOD®

The change starts here.

www.decowood.com