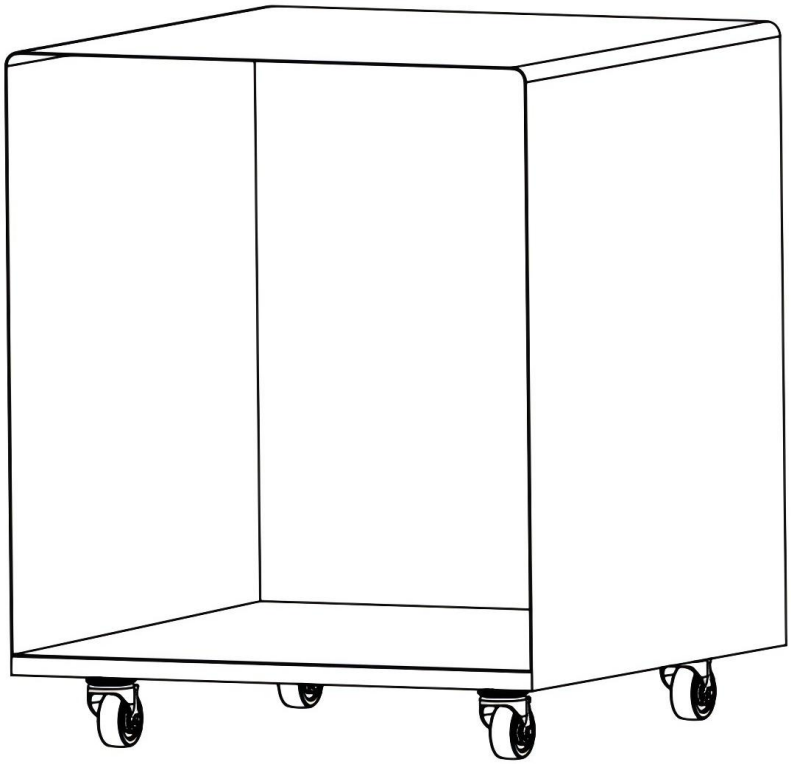

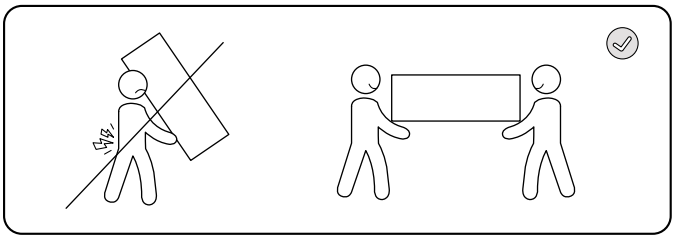

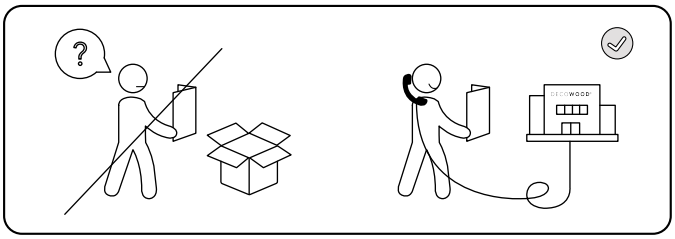

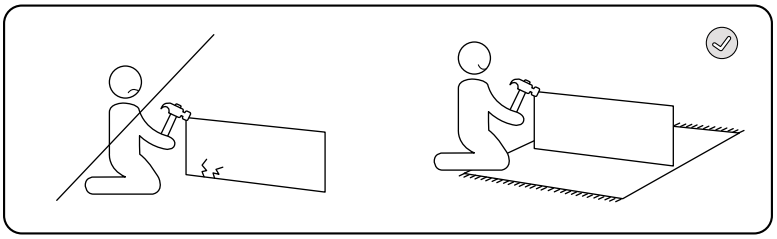

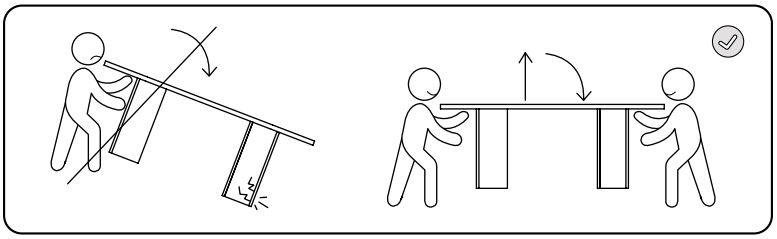

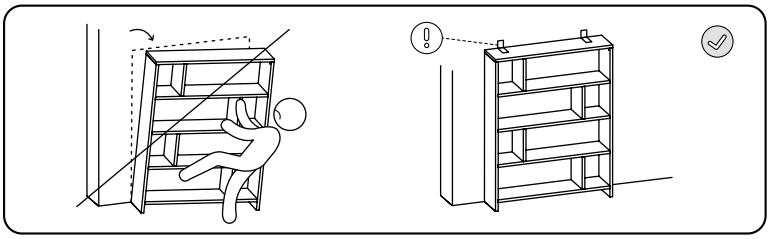

DECOWOOD®

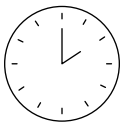

5 min



x1

A	B
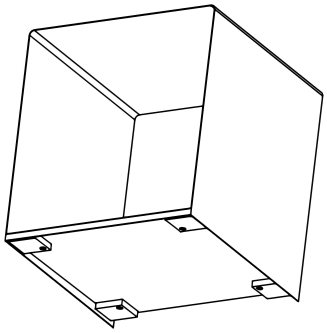	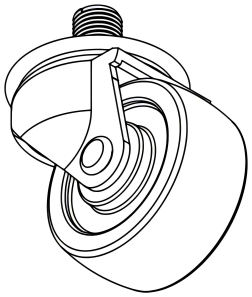
1	4



C x1
M8

1

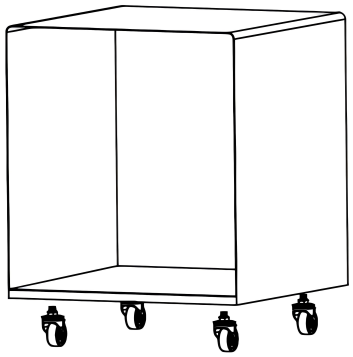

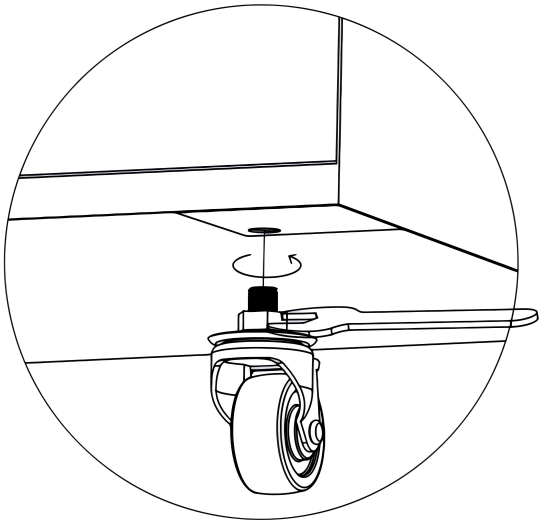

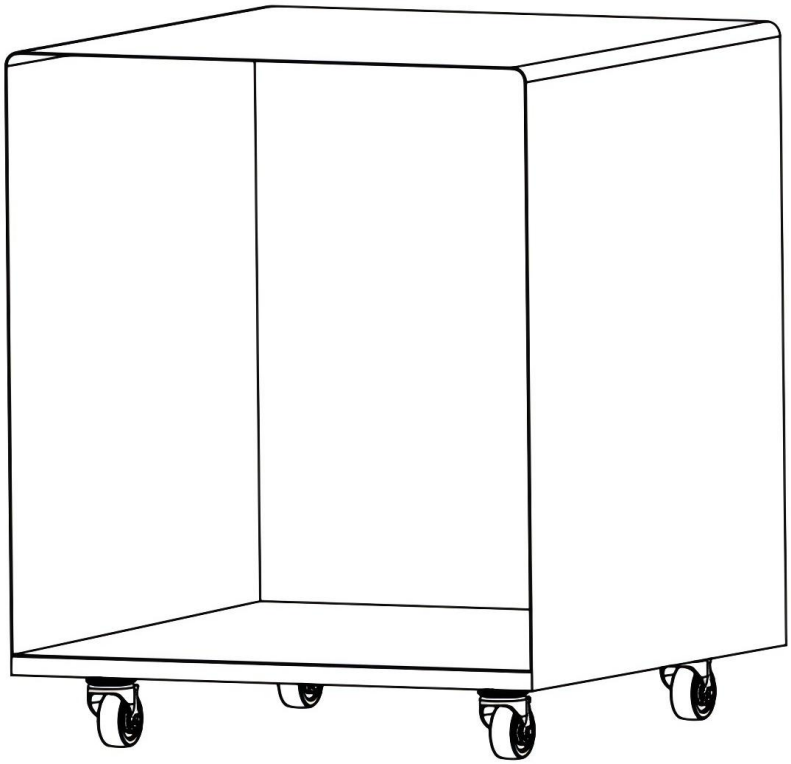

DECOWOOD®

The change starts here.

www.decowood.com