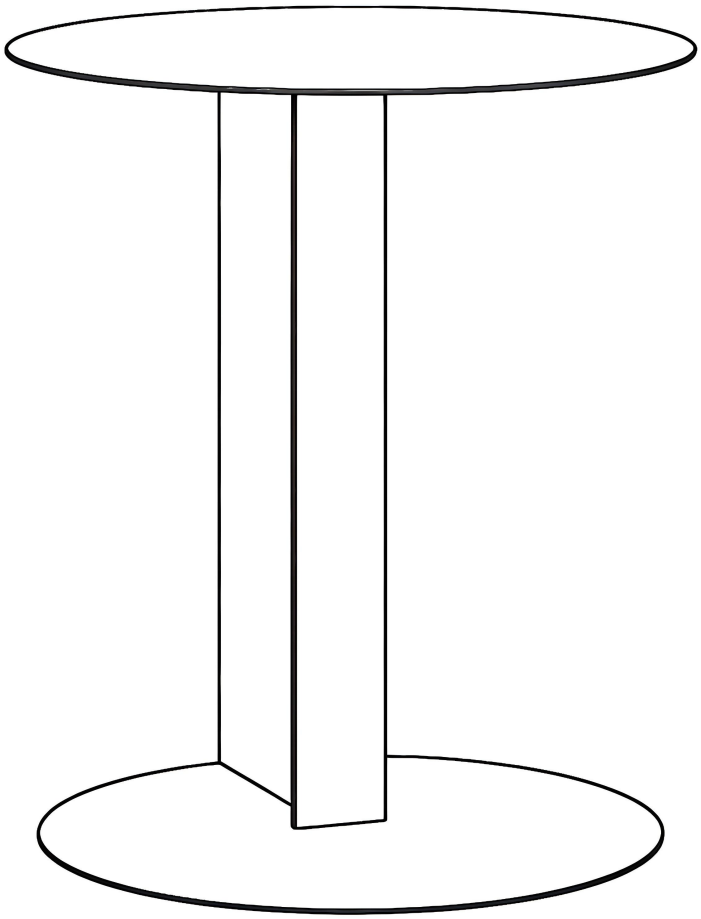

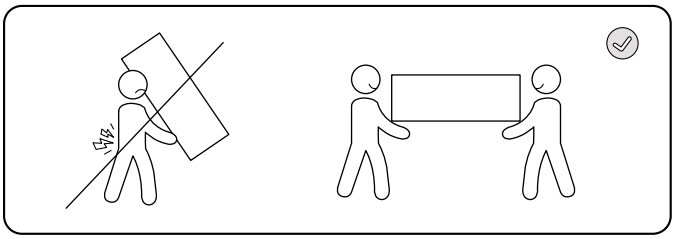

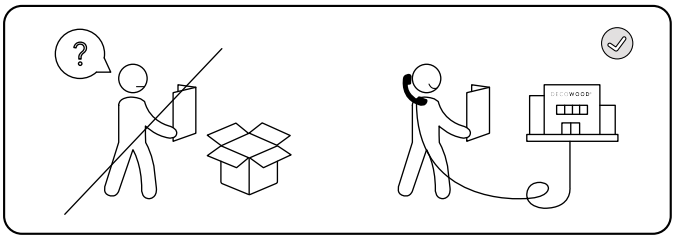

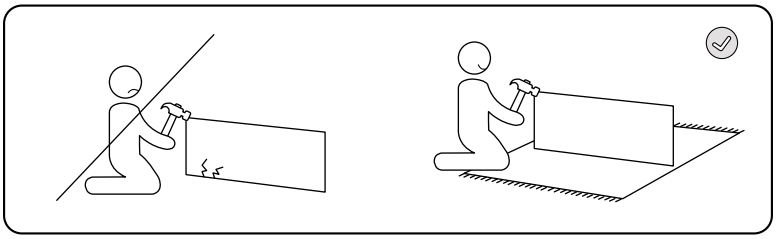

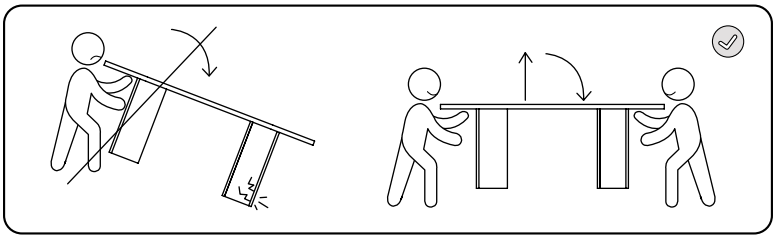

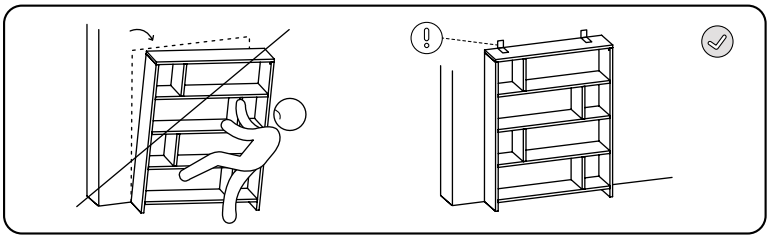

DECO**WOOD**®

6 min

x1

A	B	C
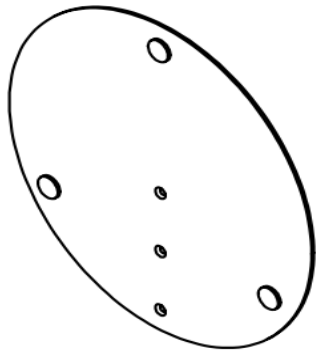	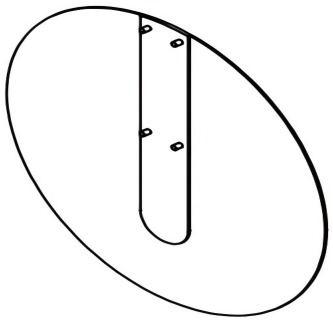	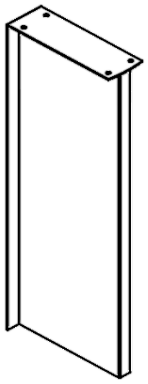
1PCS	1PCS	1PCS

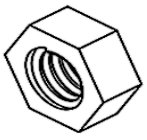

D x3
Ø6mm



E x3
Ø6x16mm



F x1
M6

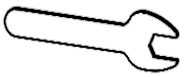

G x1
M6

1

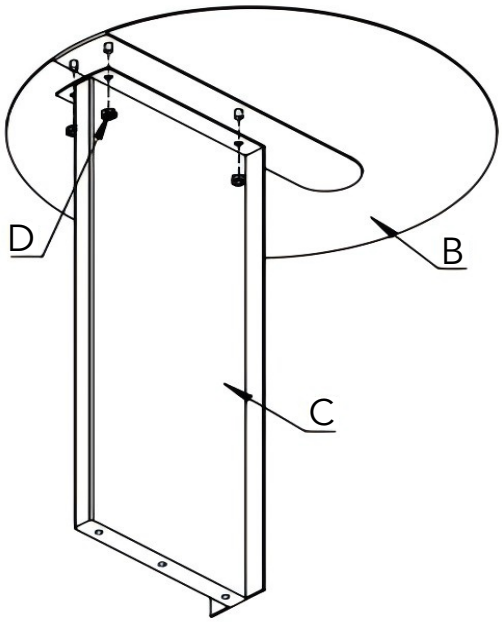

2

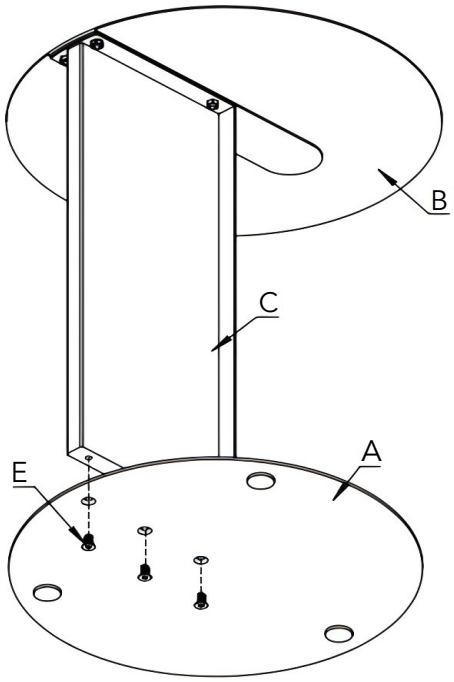

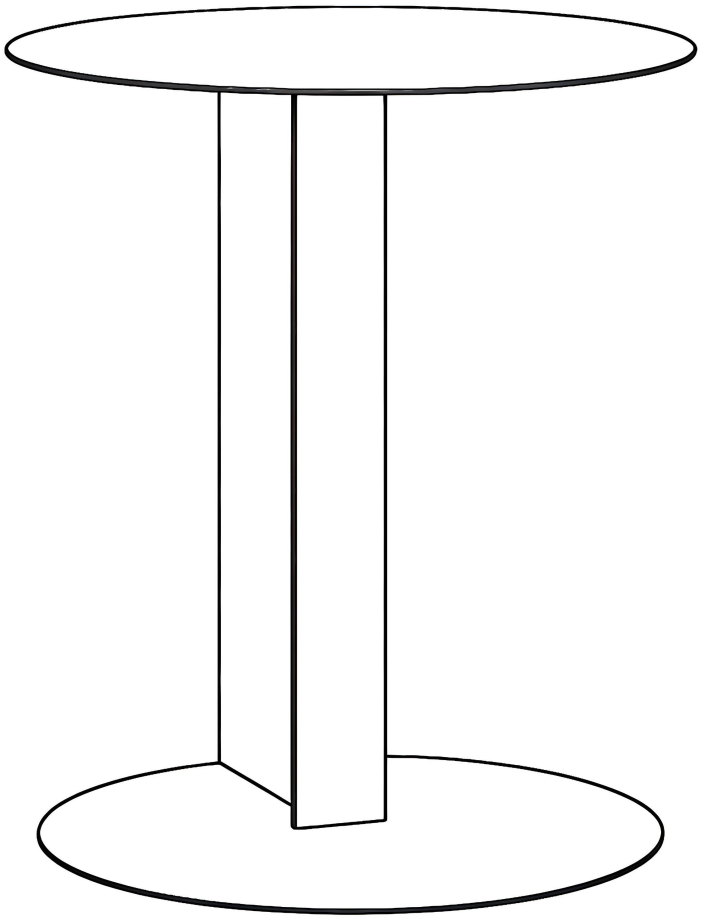

DECOWOOD®

The change starts here.

www.decowood.com