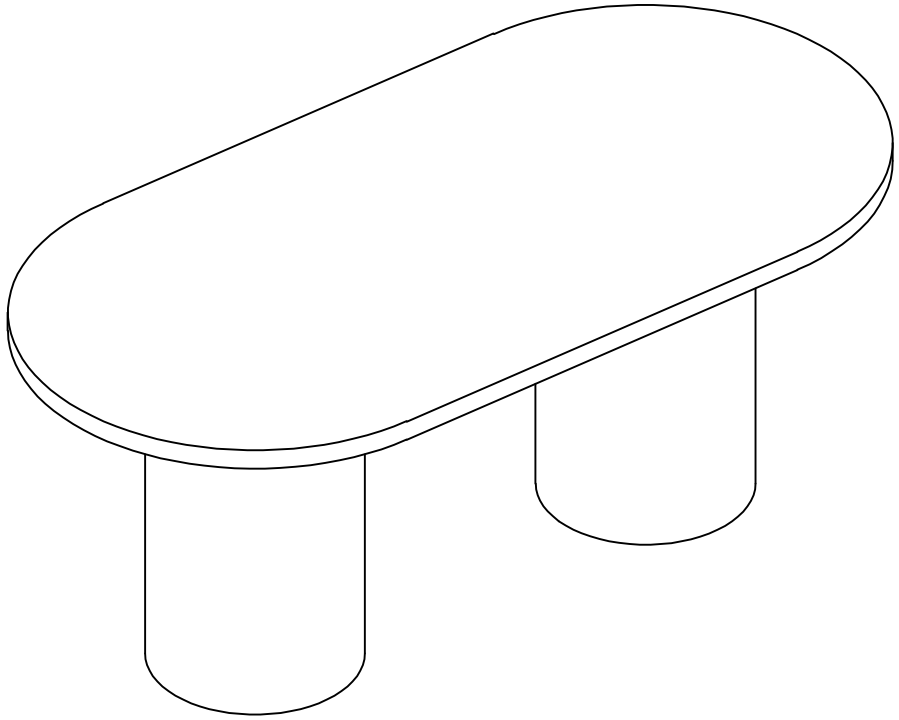

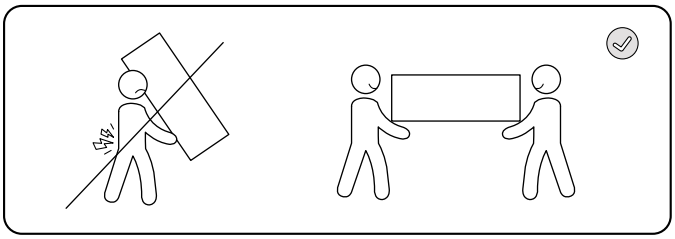

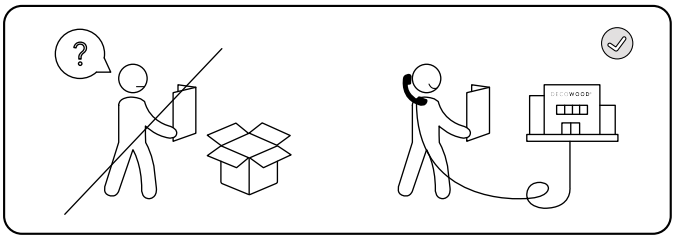

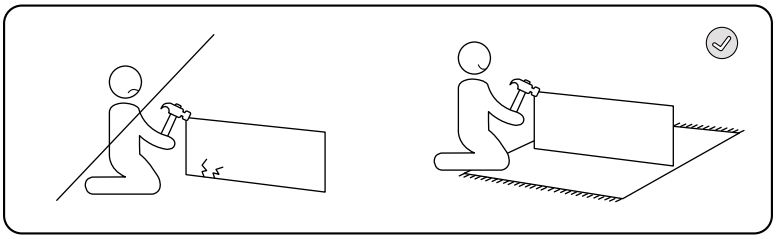

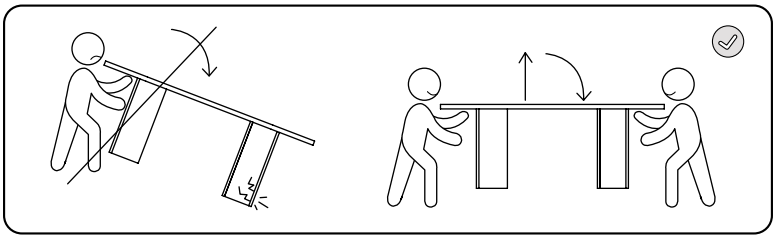

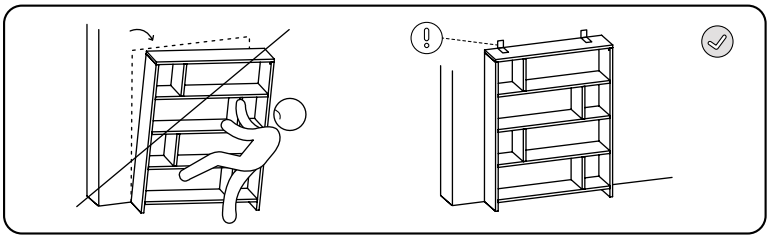



25 min

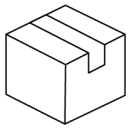

x3



x2

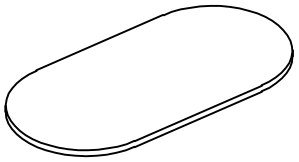

A x1

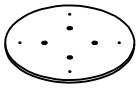

B x2

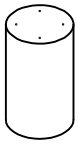

C x2

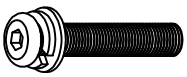

D x16
Ø8x35mm

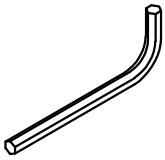

E x1
Ø5mm

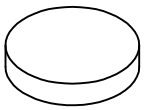

F x8

1

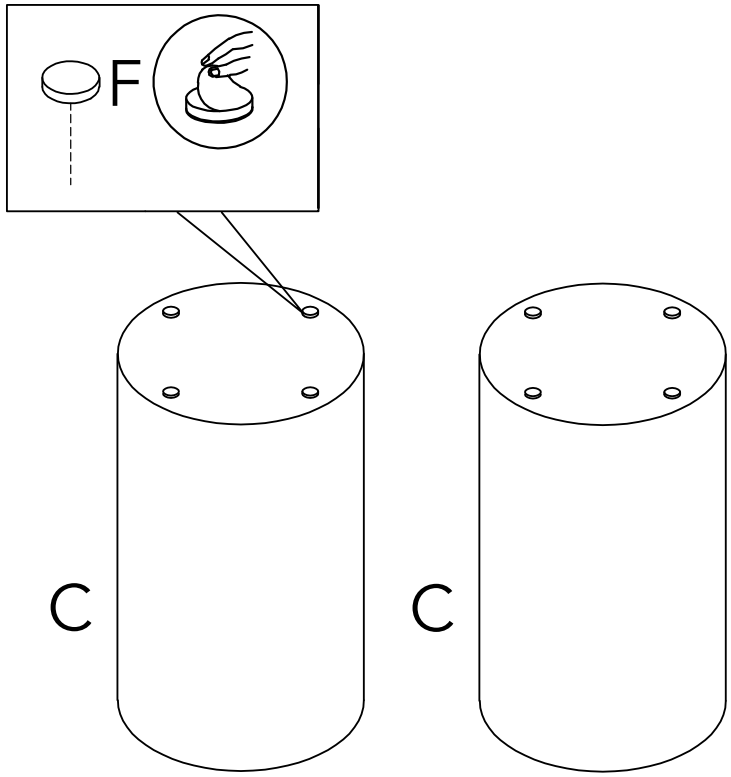

2

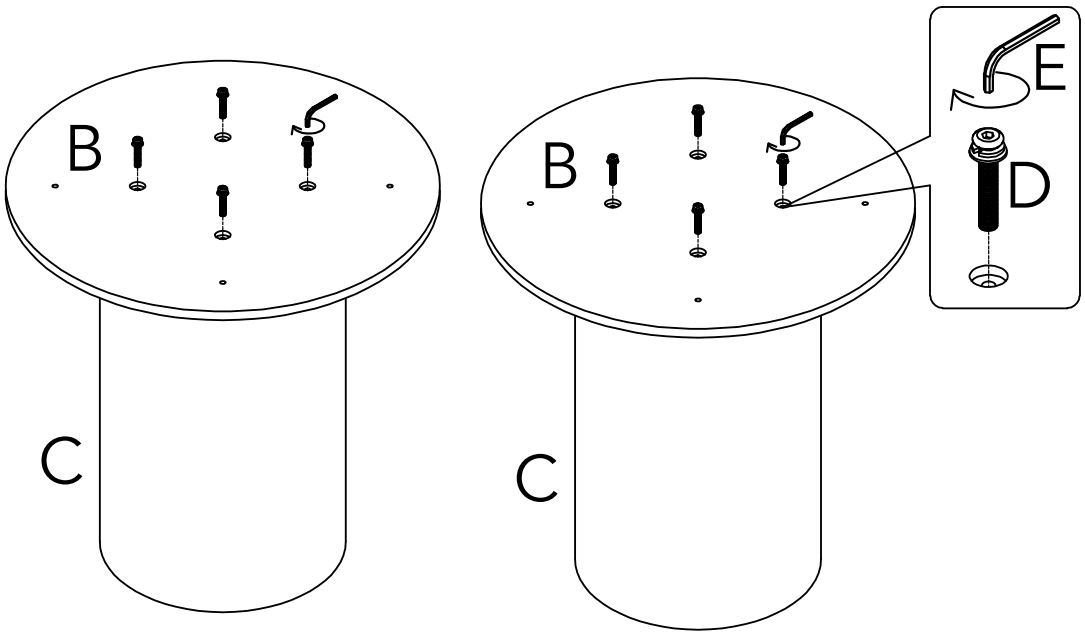

3

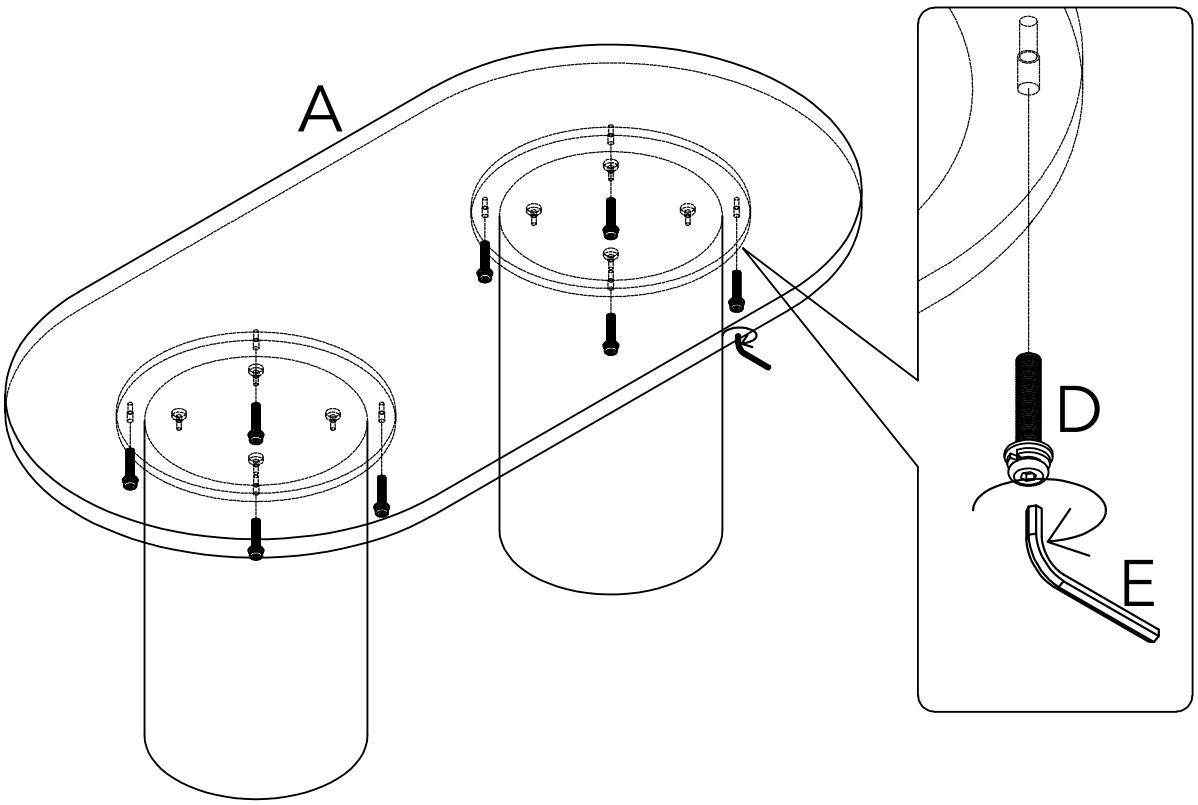

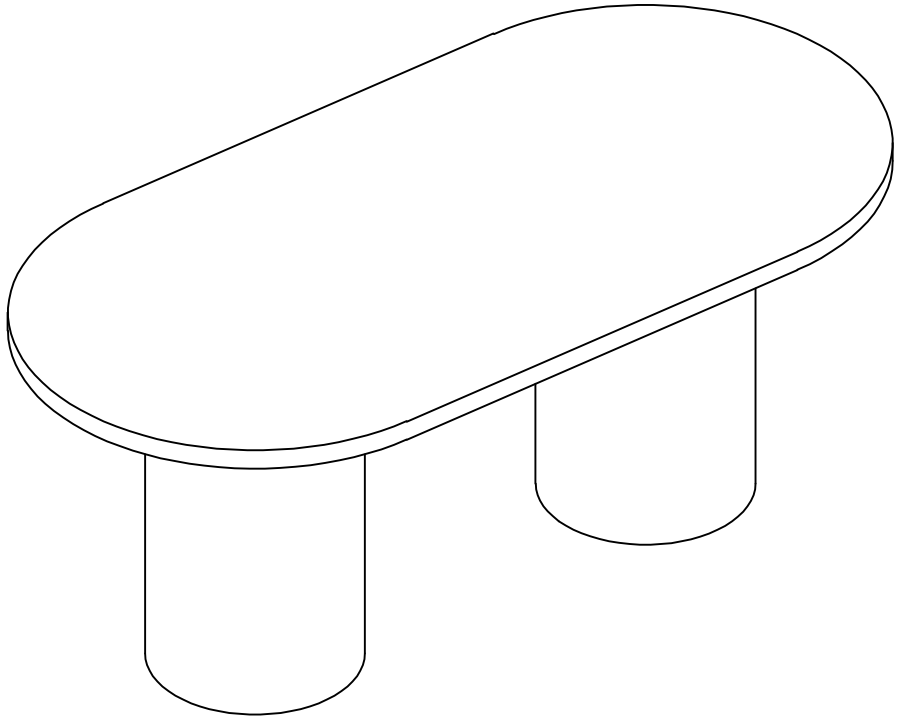

DECOWOOD®

The change starts here.

www.decowood.com