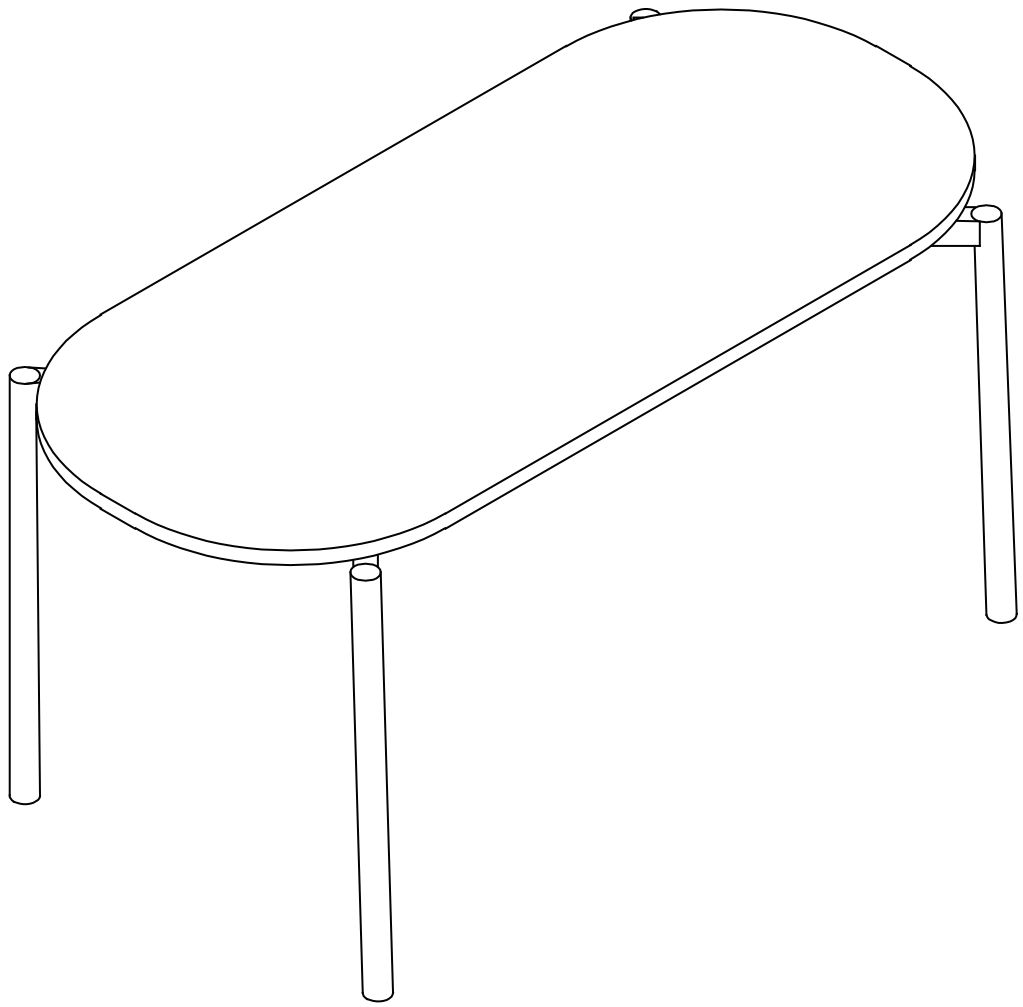

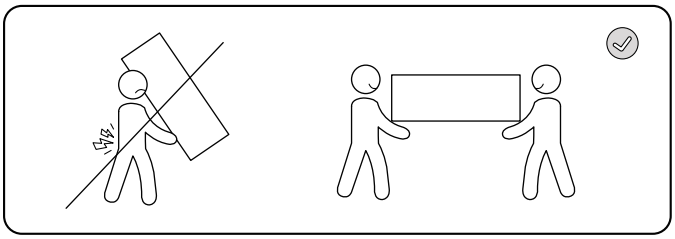

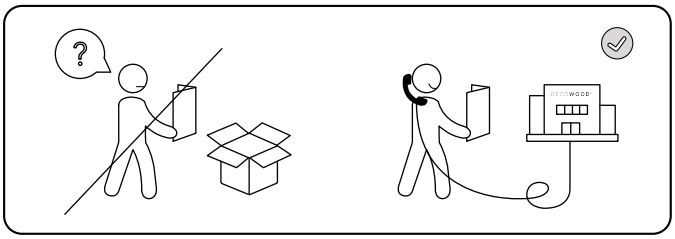

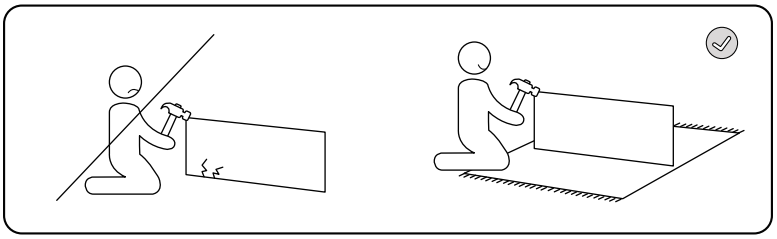

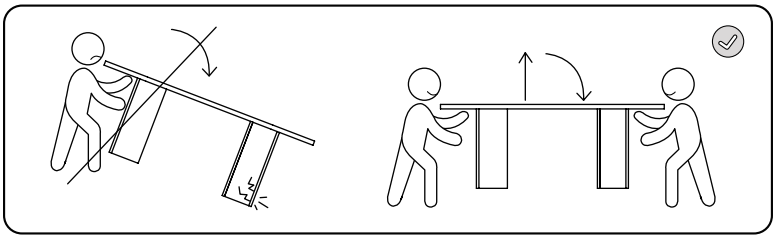

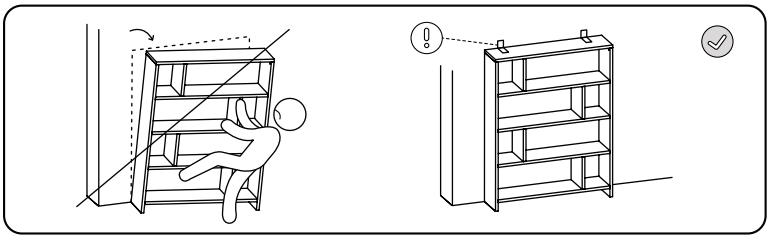

DECO**WOOD**®



10 min



x1

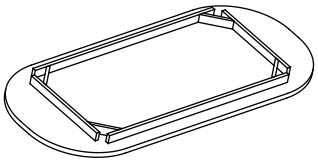

①x1

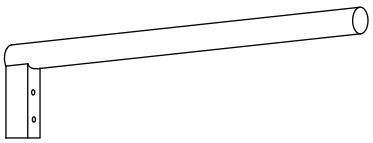

②x4

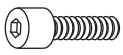

A x8
M8x45mm

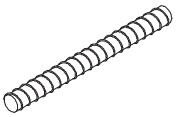

B x8
M8x70mm

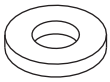

C x16



D x8



E x8



F x4



G x1



H x1

1

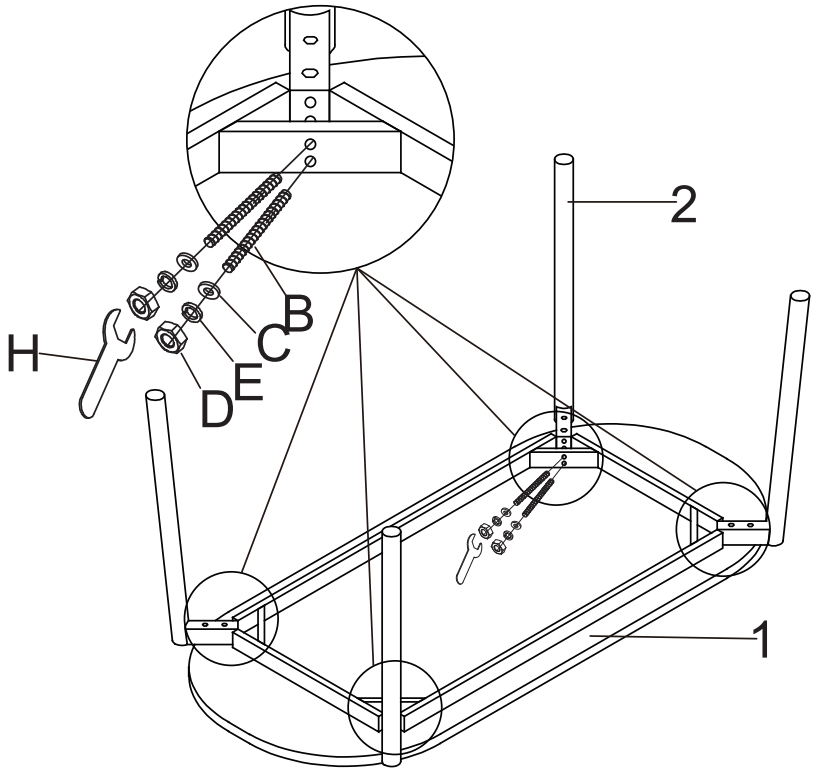

2

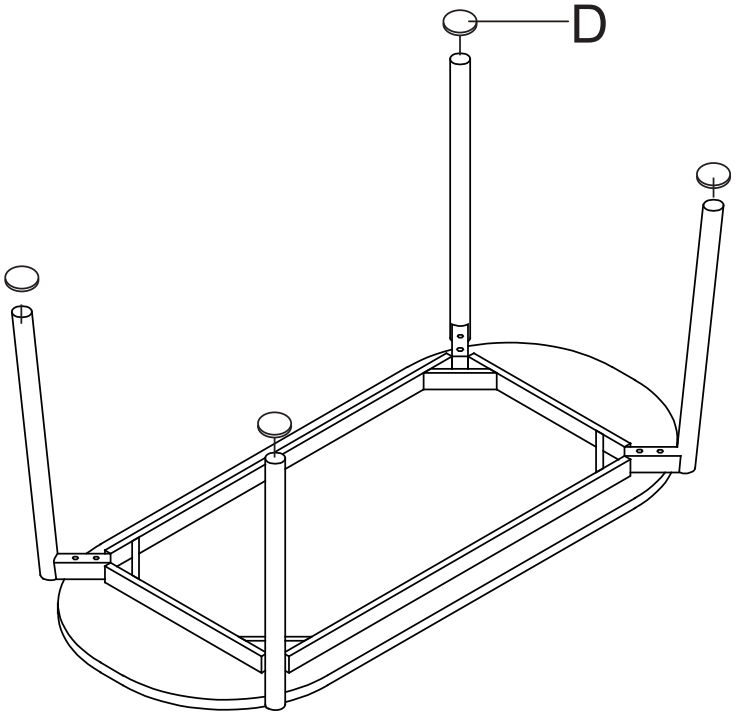

3

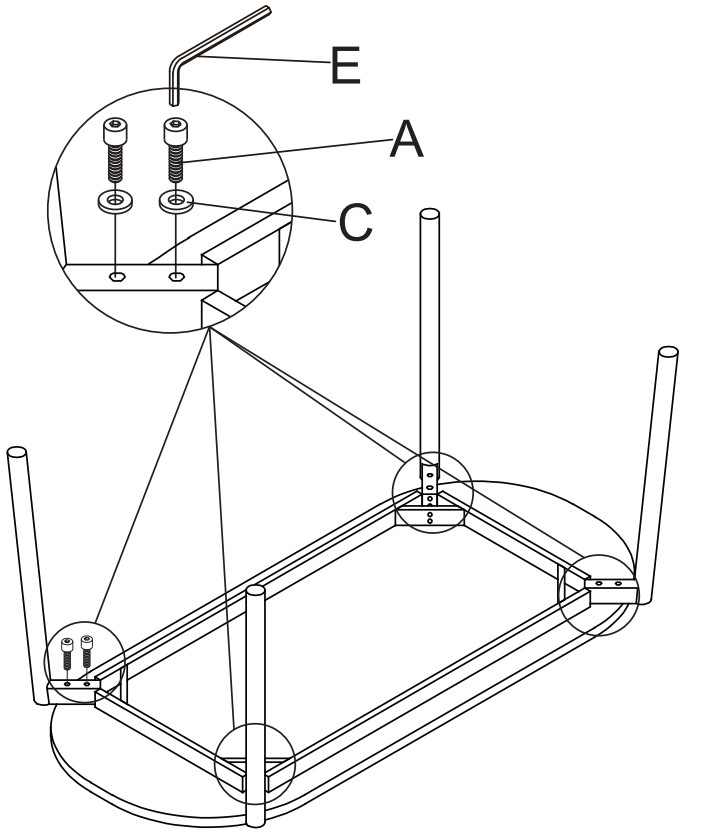

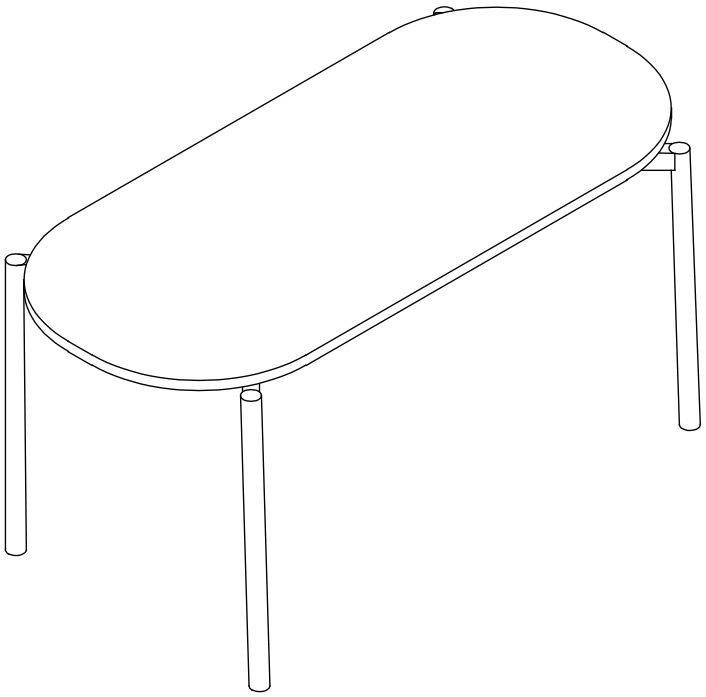

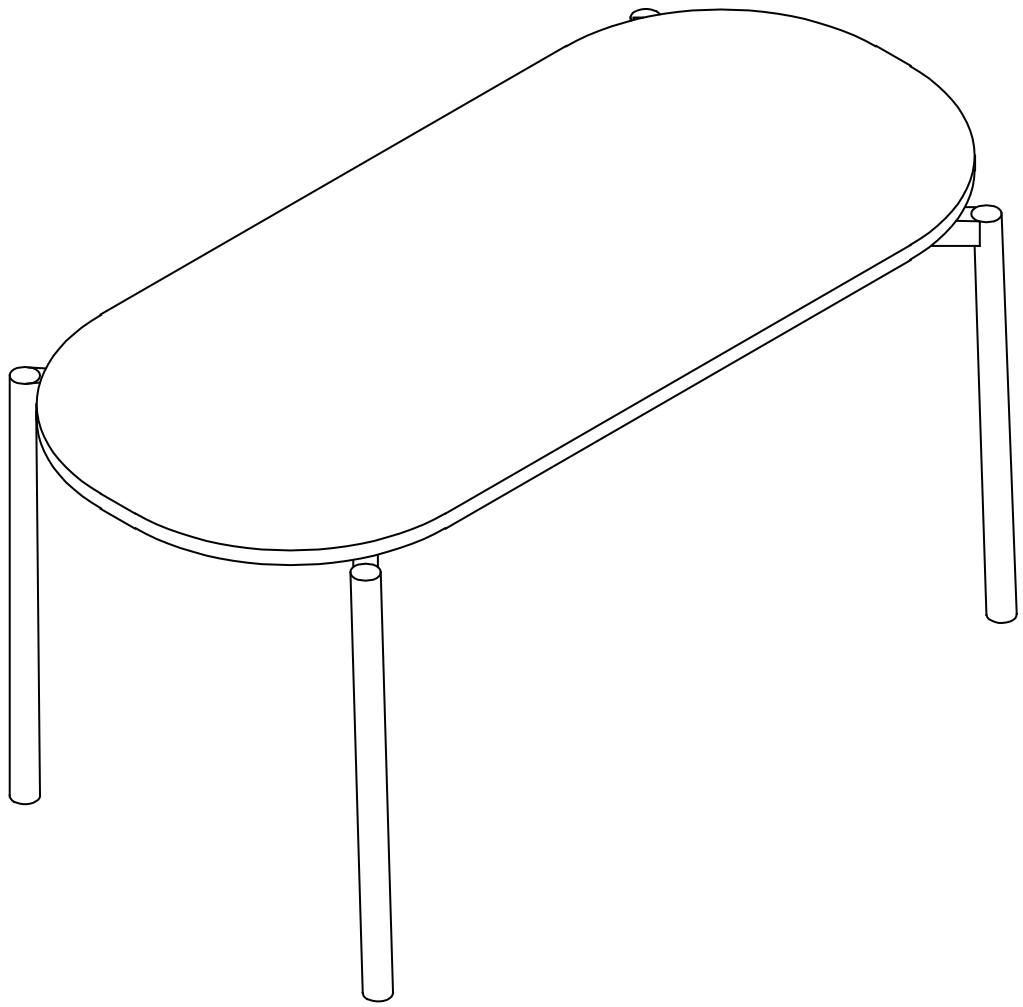

DECOWOOD®

The change starts here.

www.decowood.com