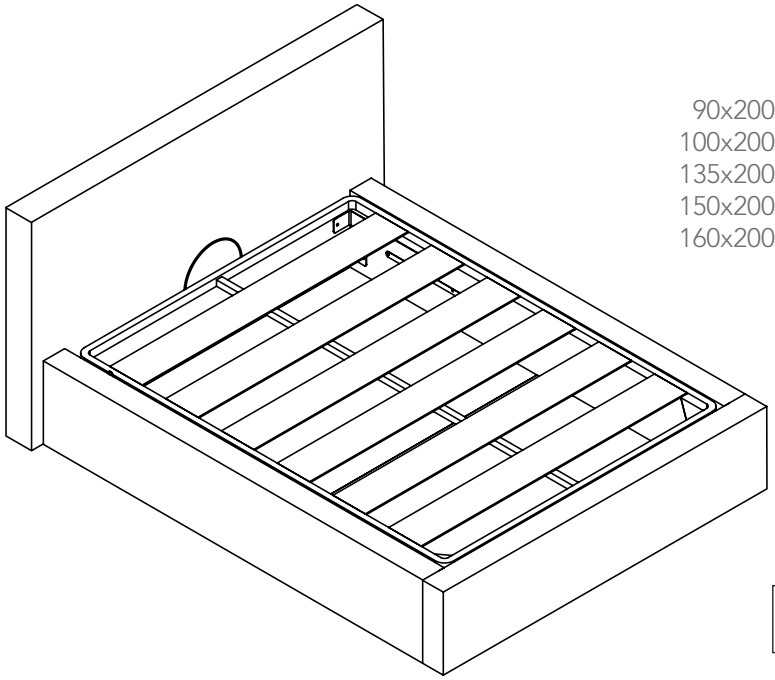

90x200 cm
100x200 cm
135x200 cm
150x200 cm
160x200 cm

2

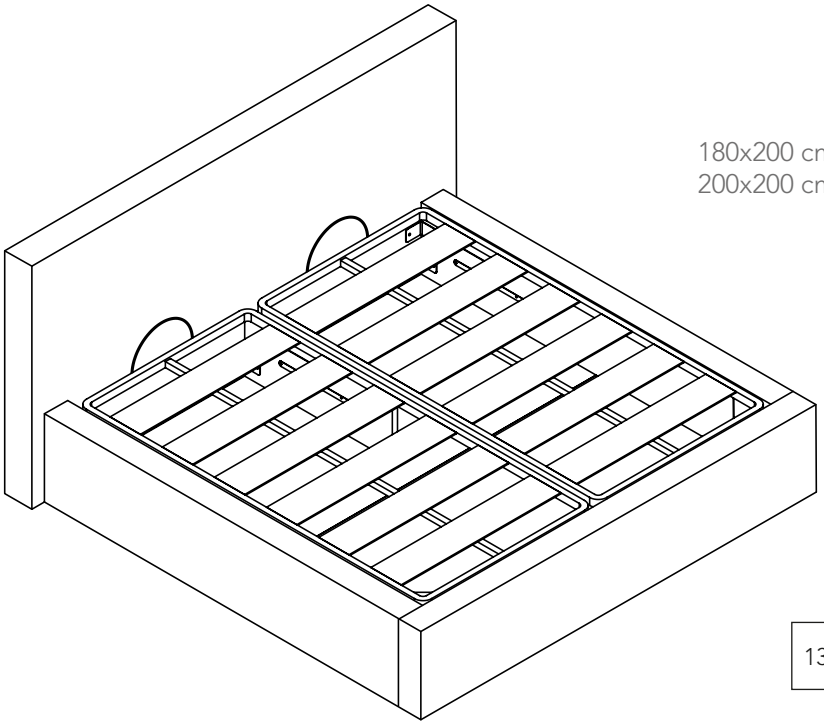

180x200 cm
200x200 cm

13

90x200 cm
100x200 cm
135x200 cm
150x200 cm
160x200 cm

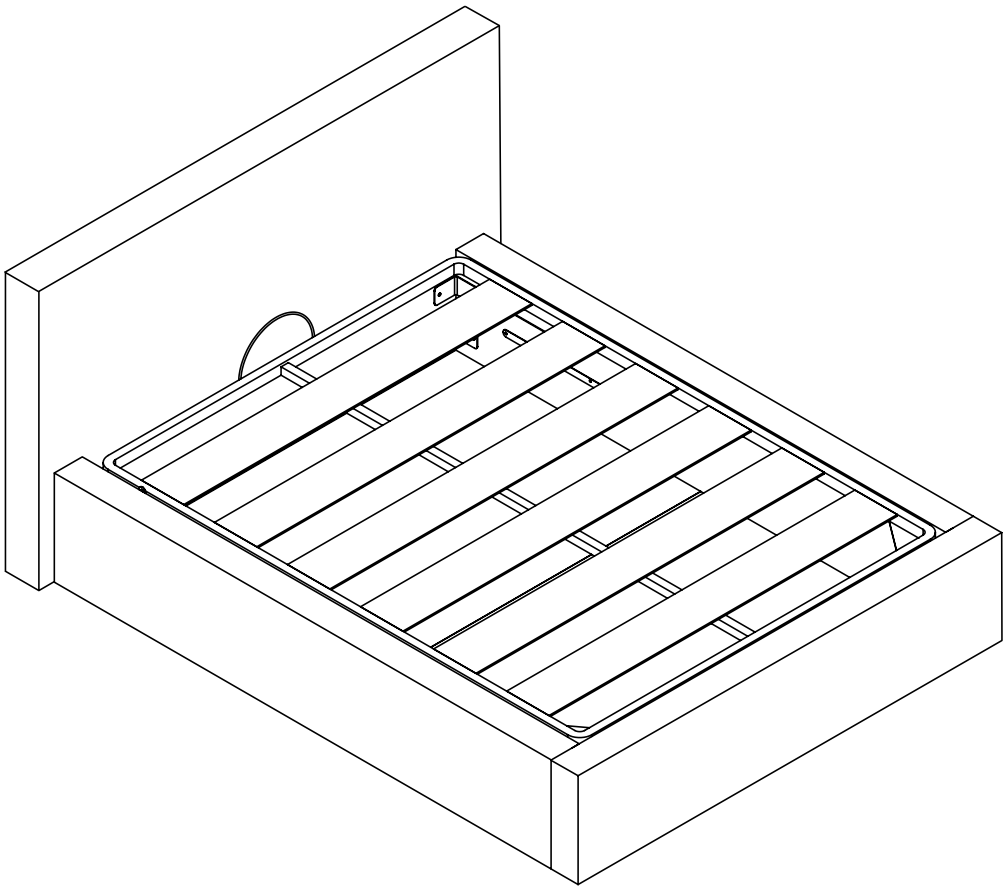

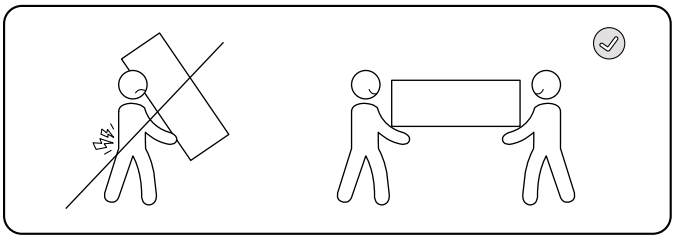

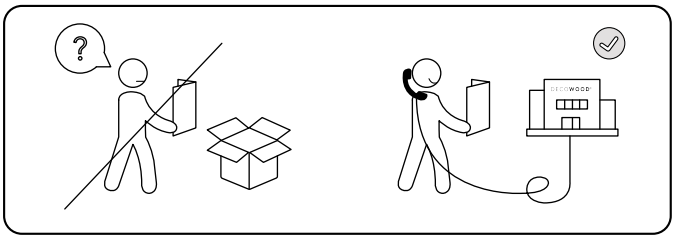

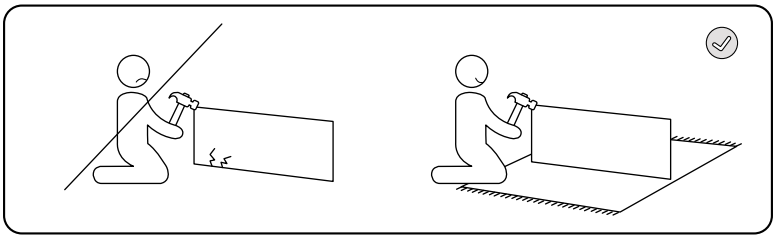

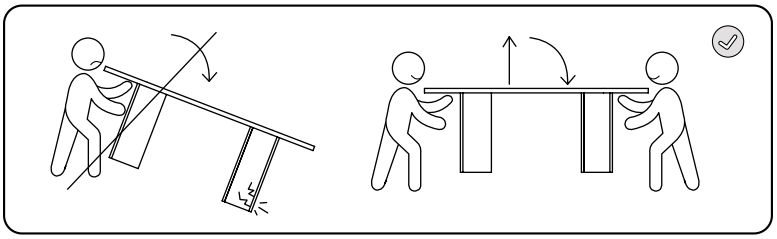

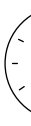
60 min

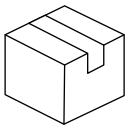
x3

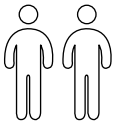
x2

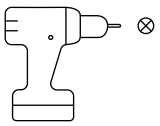
x1


x1

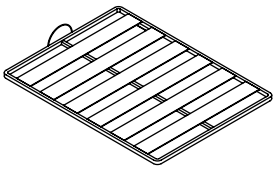
A x1

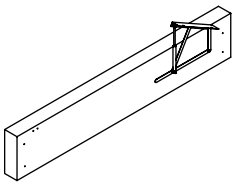
B x1

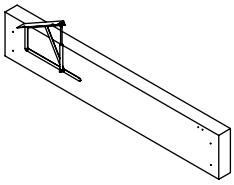
C x1

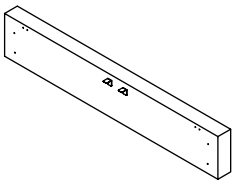
D x1

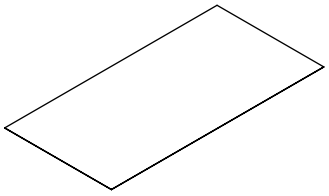
E x2

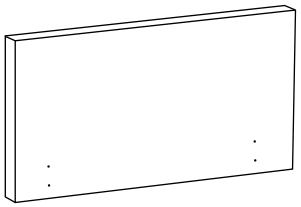
F x1

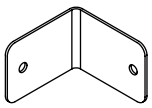
G x8

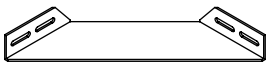
H x2

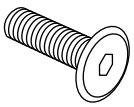
I x24
M6x20


J x4
M8x10


K x1

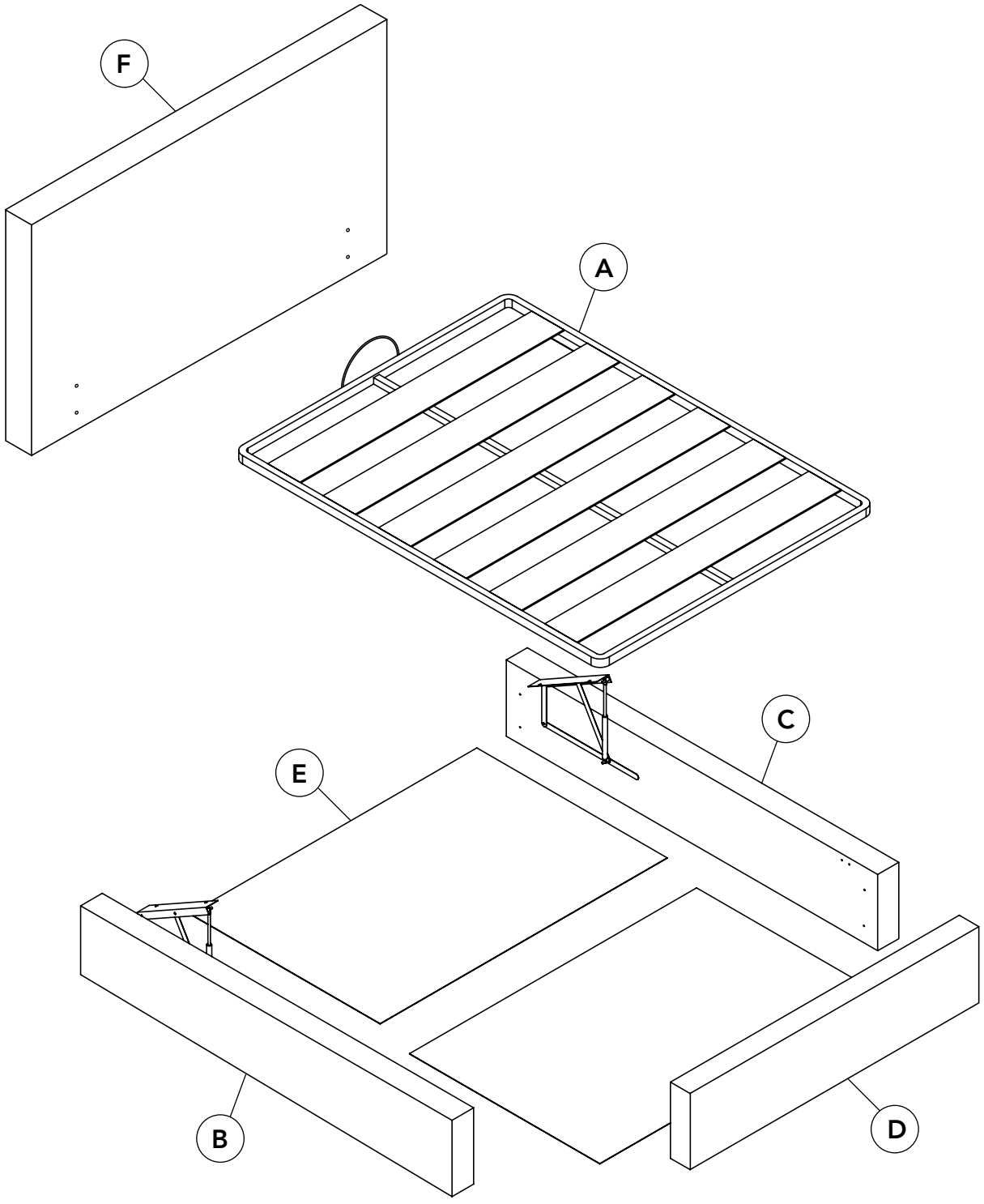
F
A
C
E
B
D

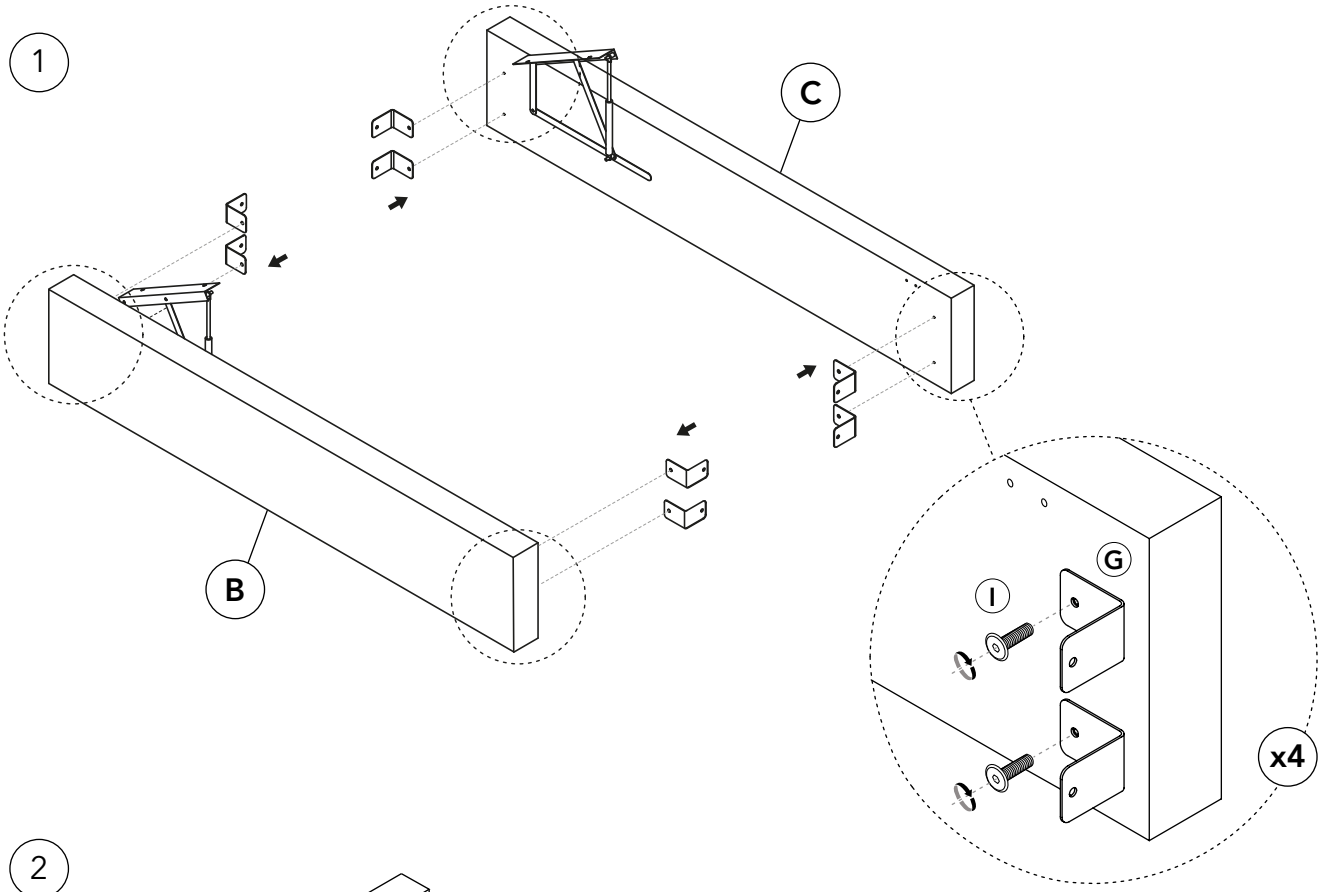
1
C
B
G
I
x4

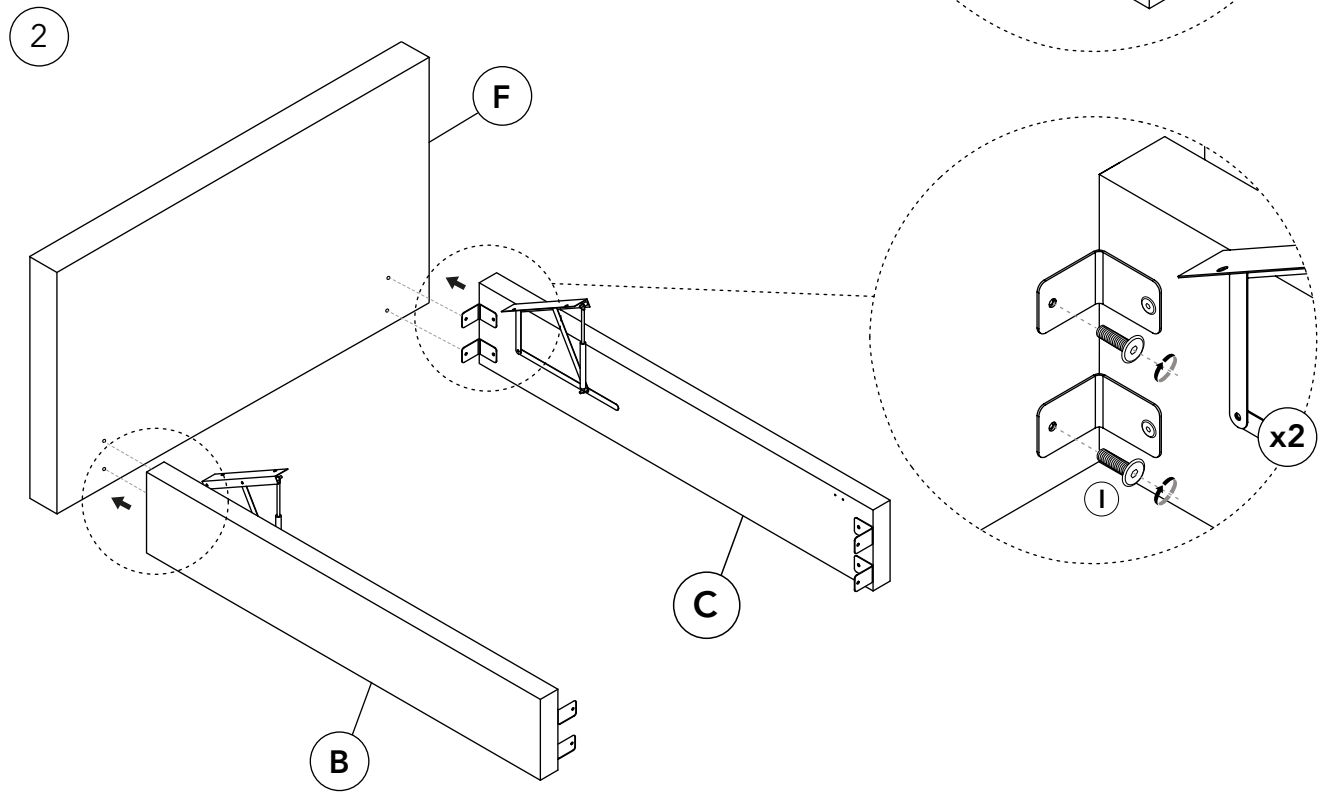
2
F
C
B
x2
I

3

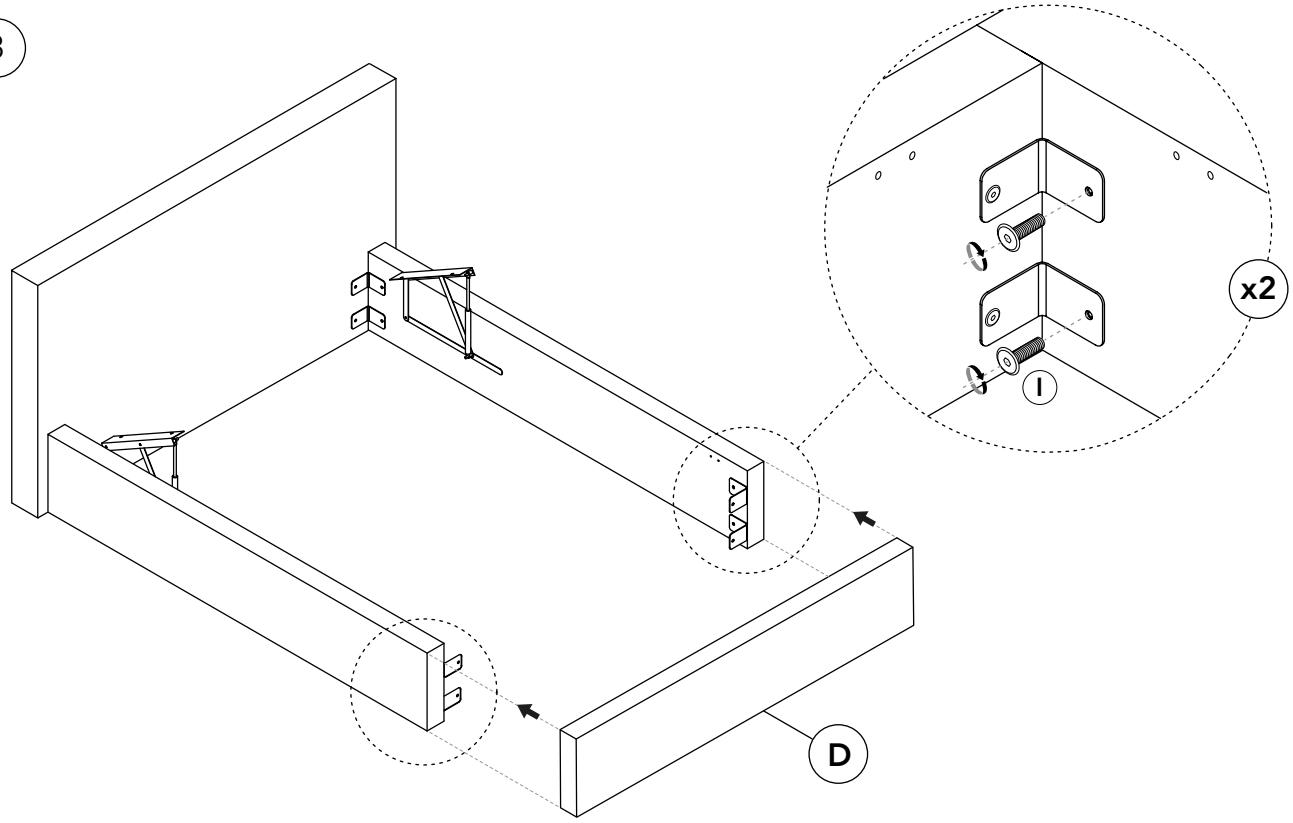

4

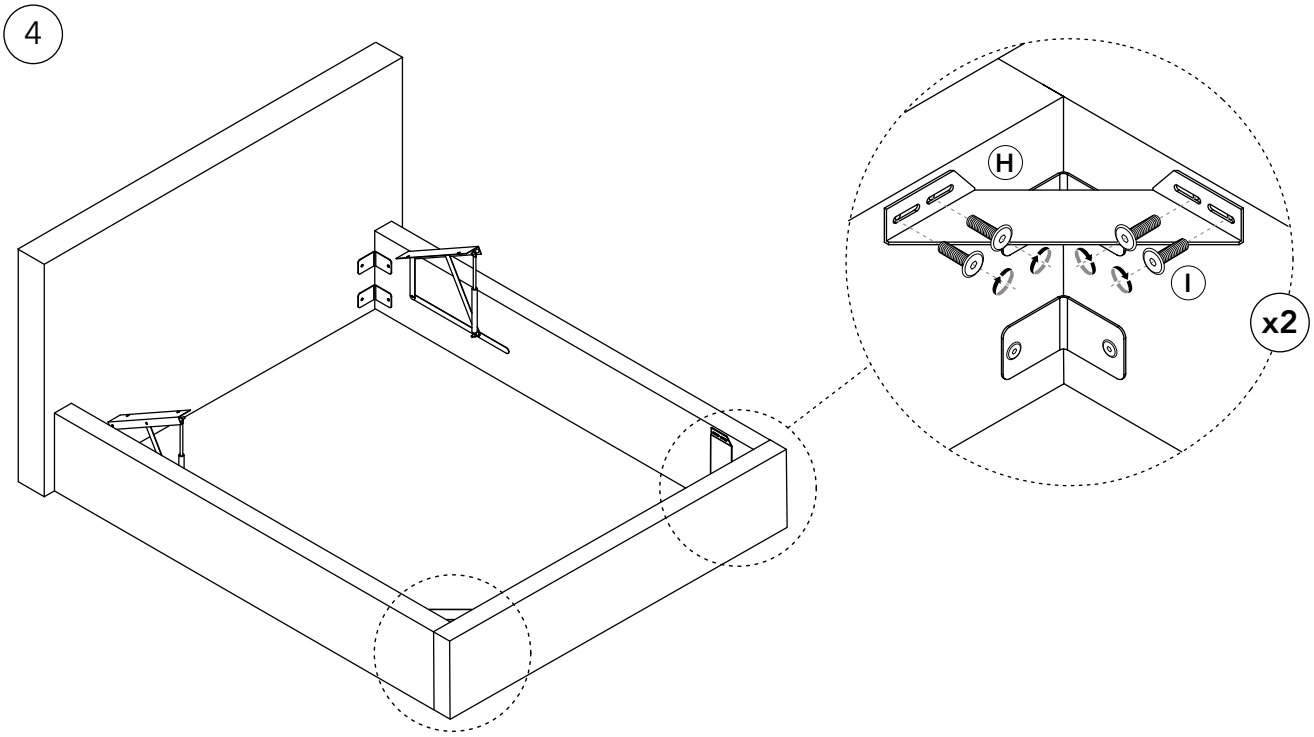

5

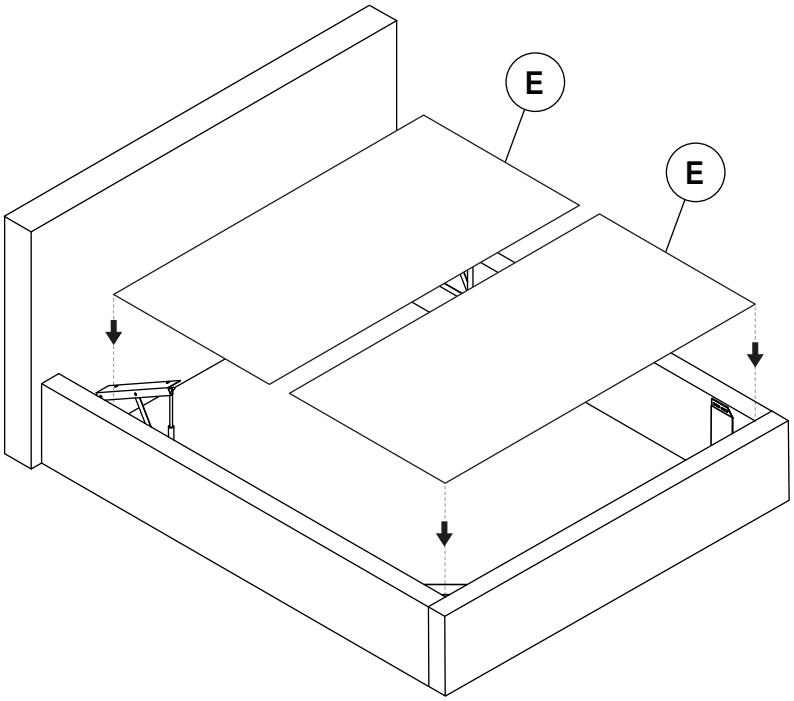

6

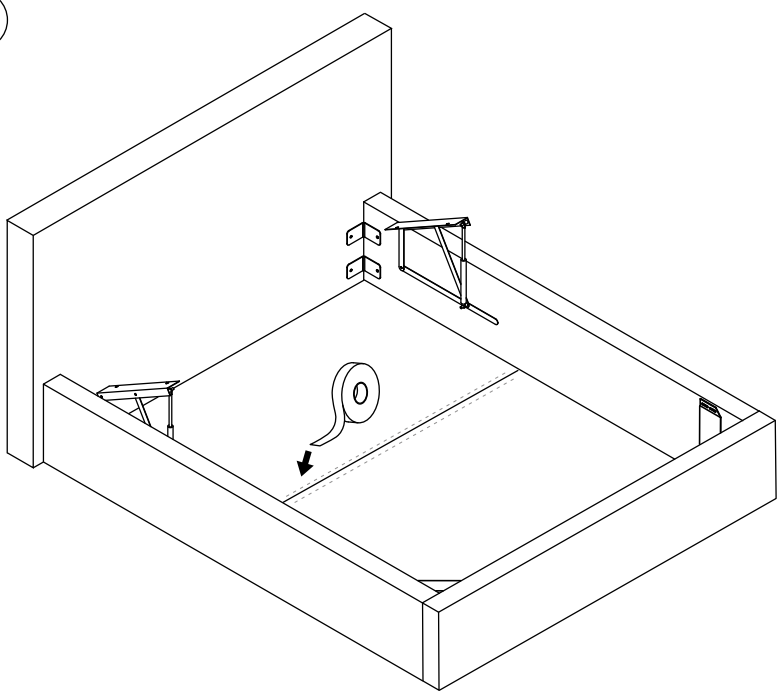

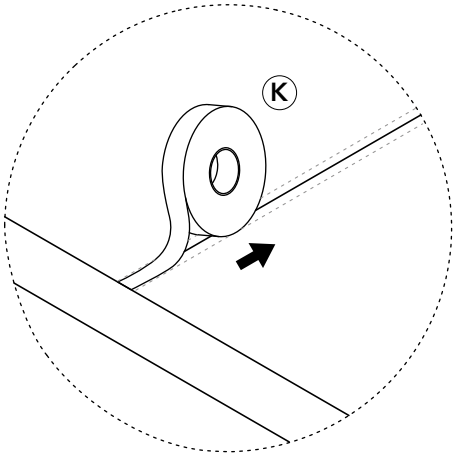

7

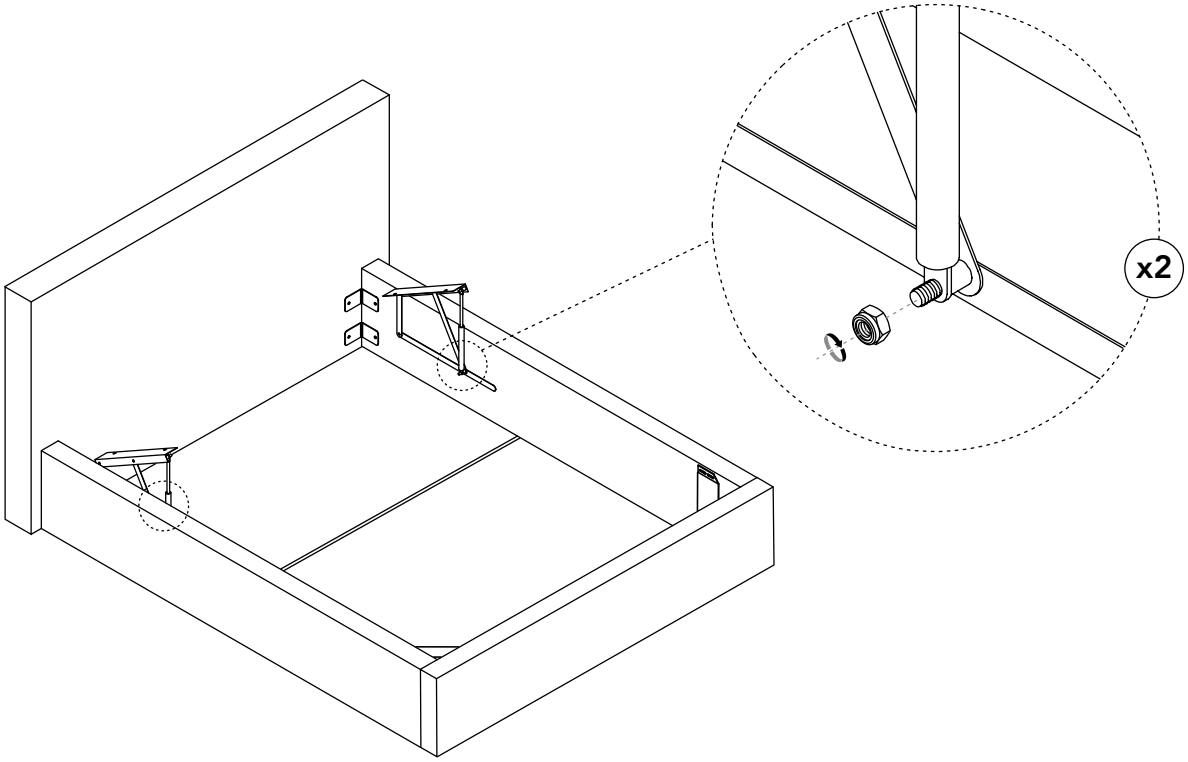

8

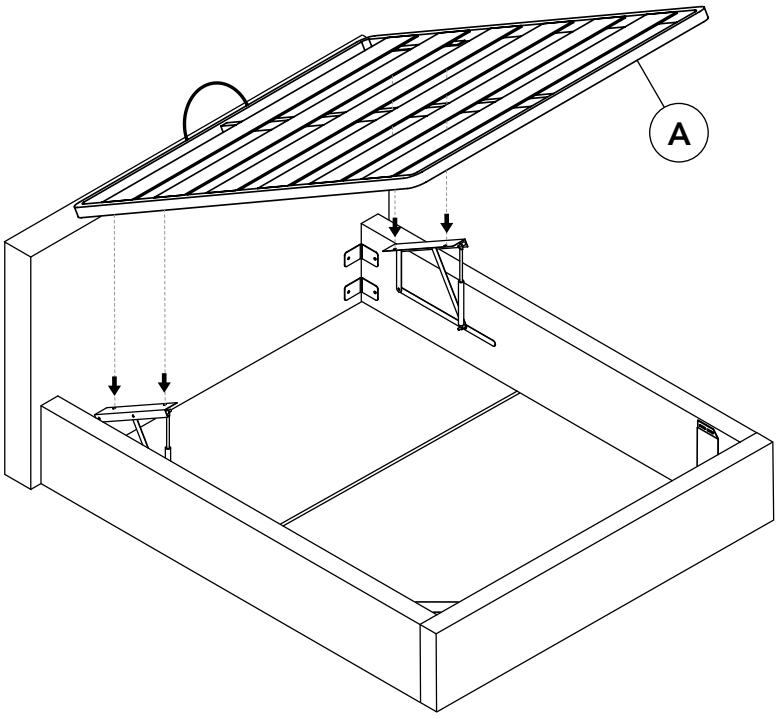

9

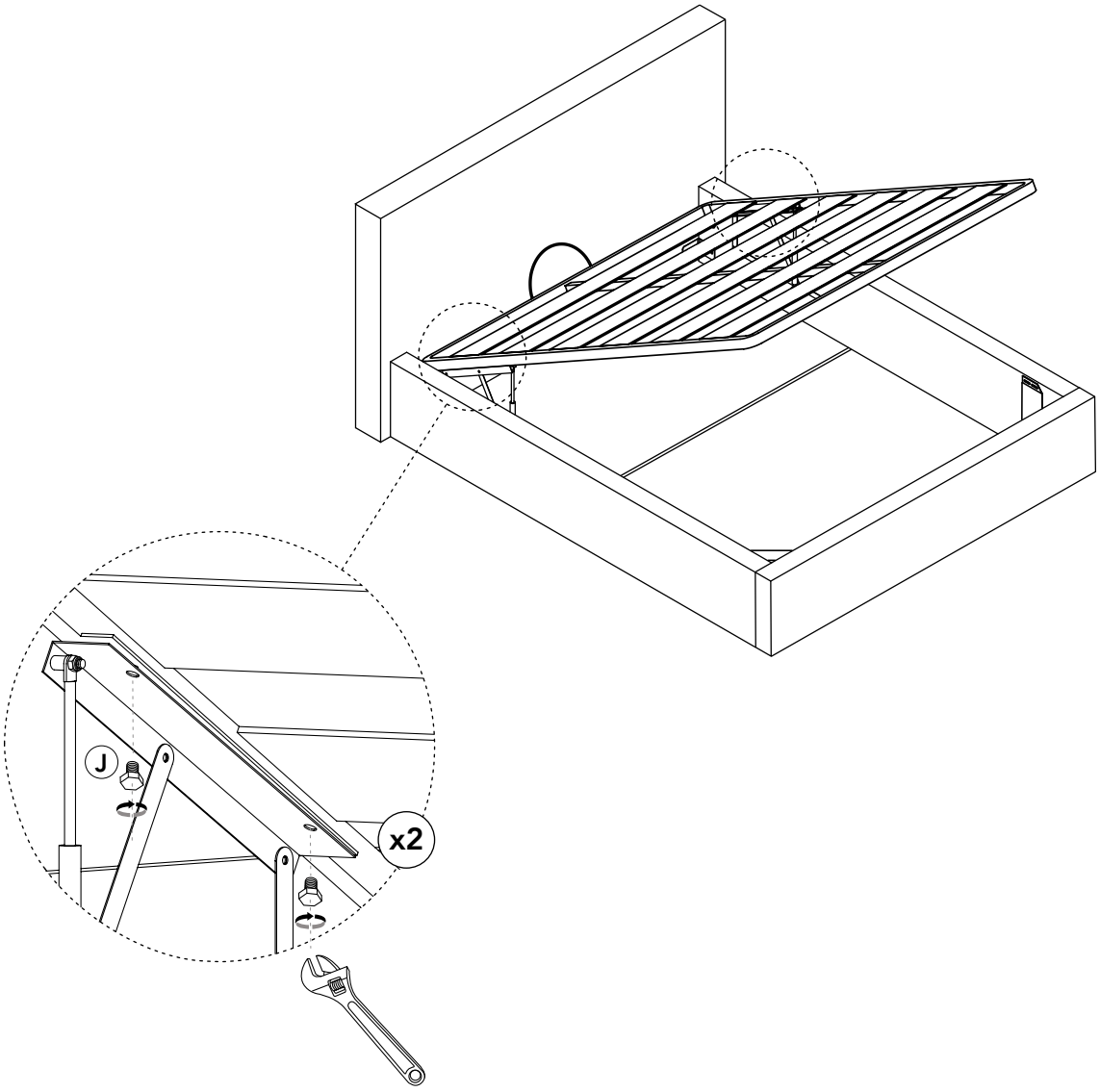

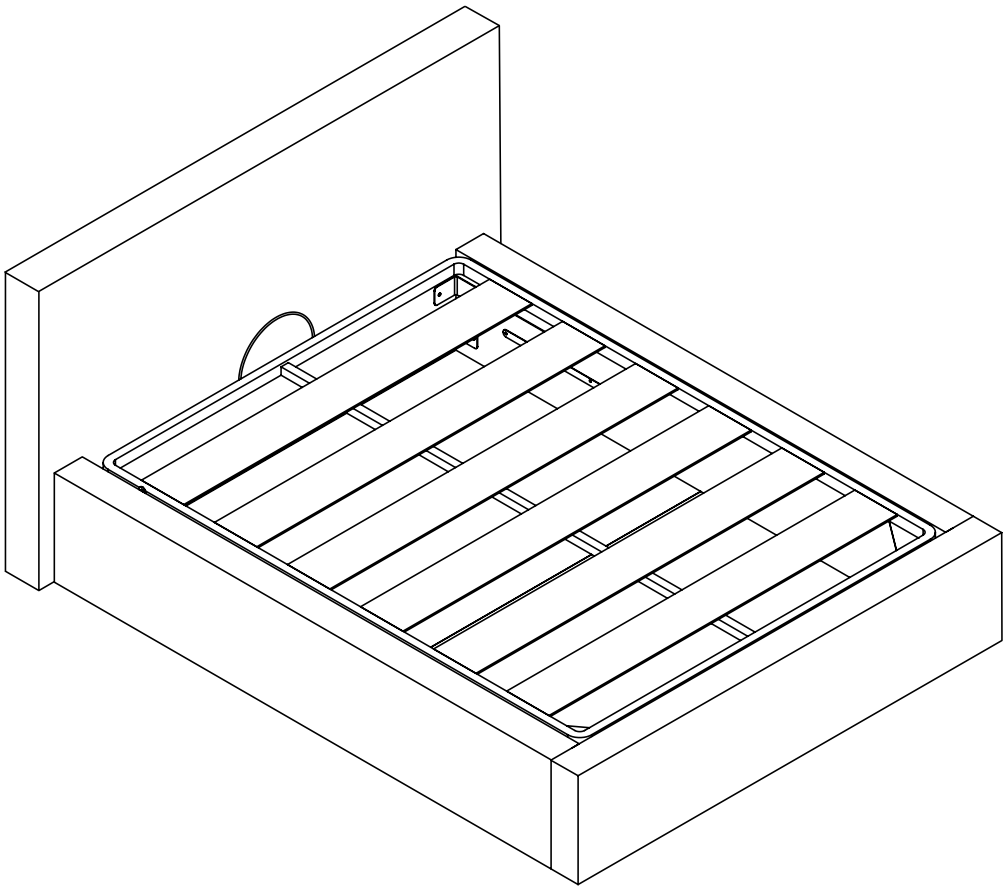

DECOWOOD®

The change starts here.

www.decowood.com

180x200 cm
200x200 cm

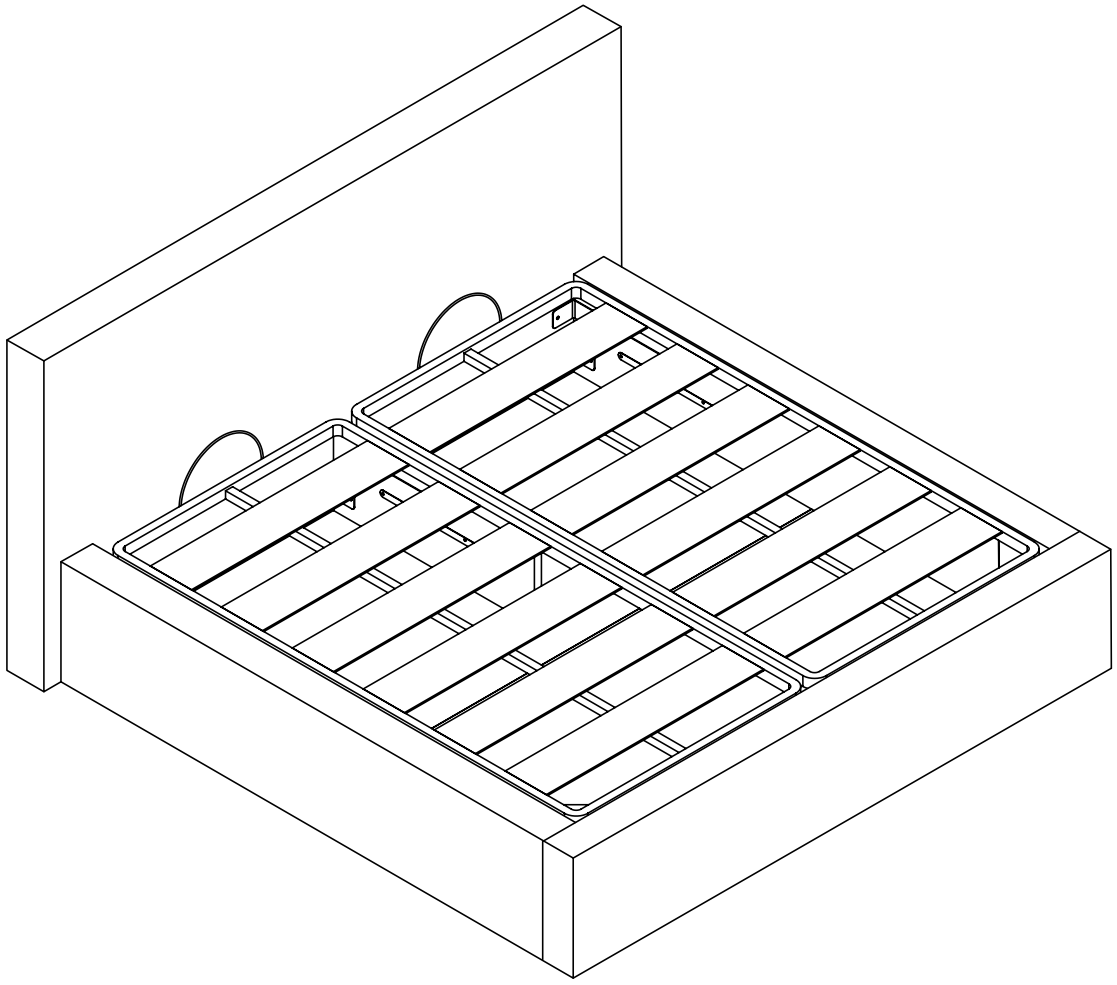

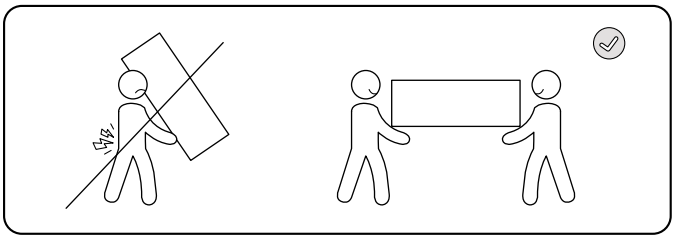

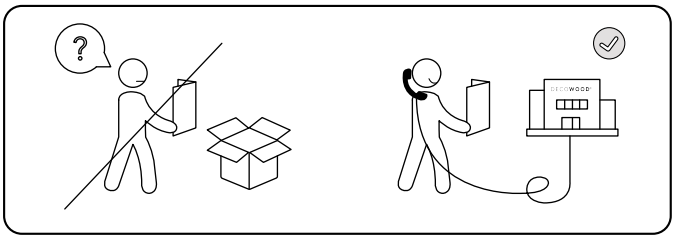

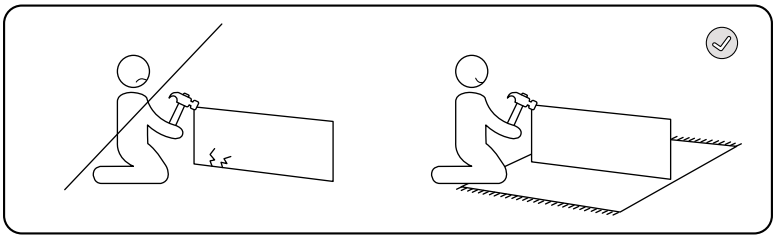

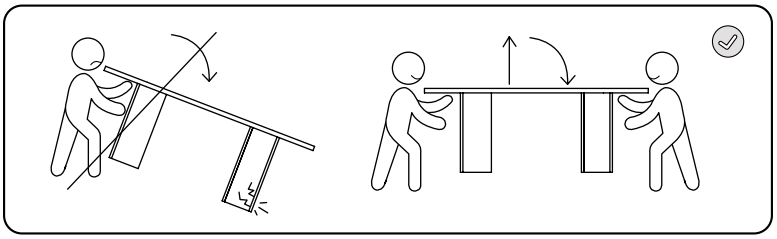

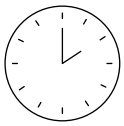
60 min

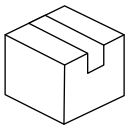
x3

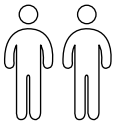
x2

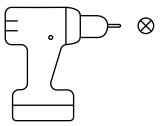
x1


x1

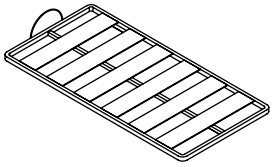
A x2

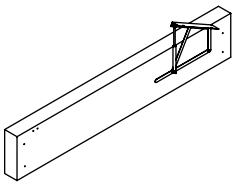
B x1

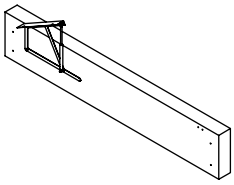
C x1

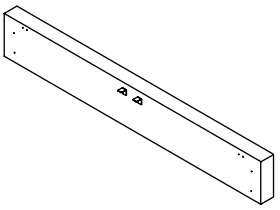
D x1

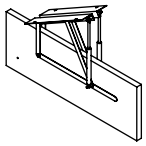
E x1

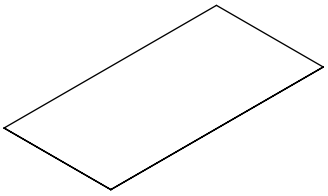
F x2

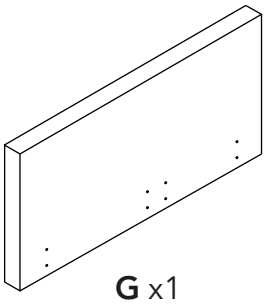
G x1

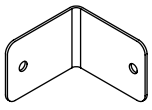
H x12

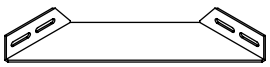
I x2

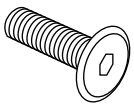
J x32
M6x20


K x10
M8x10

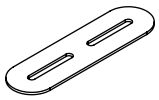
L x1

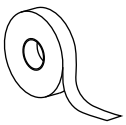
M x1

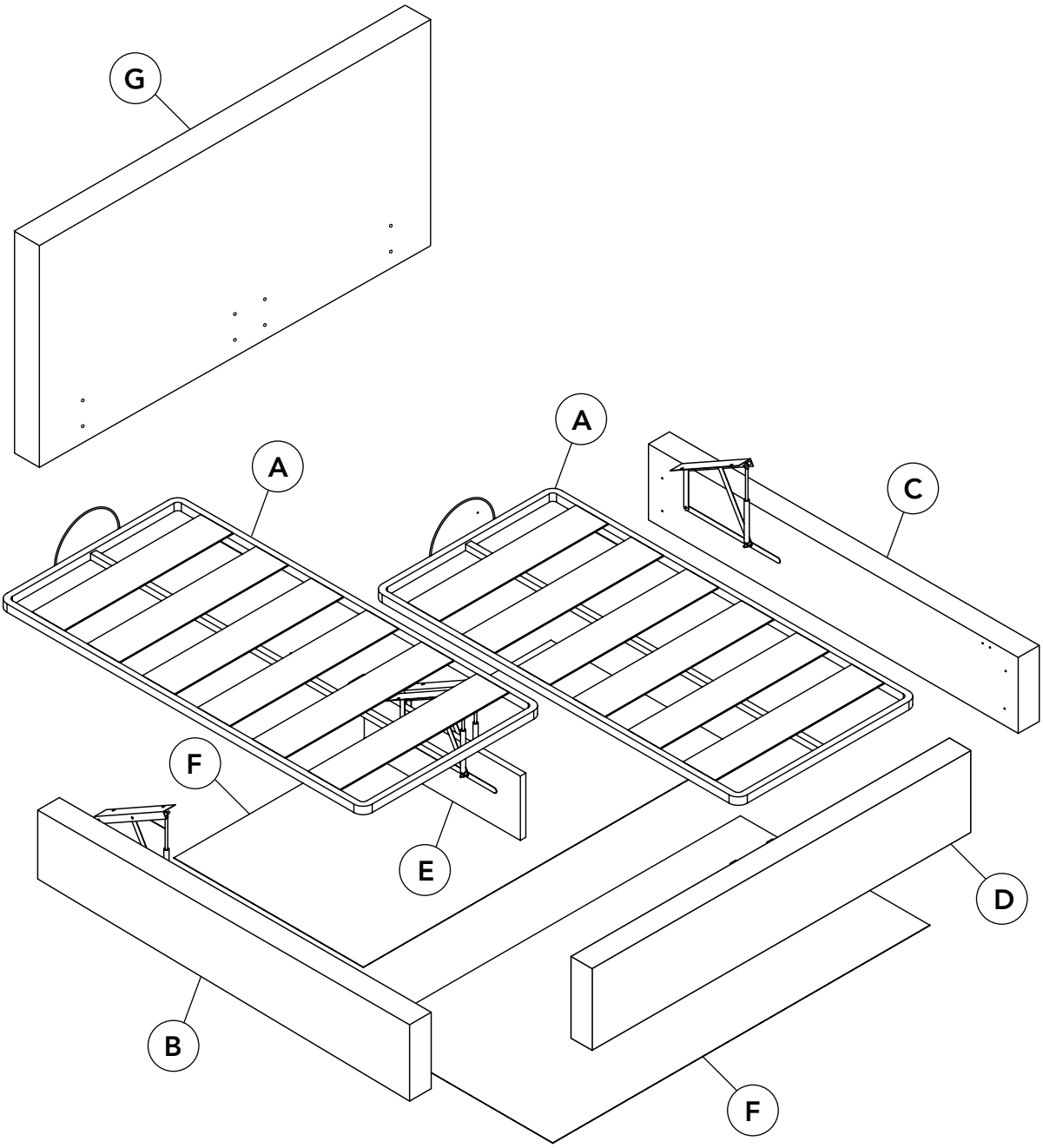
G
A
A
C
F
E
D
B
F

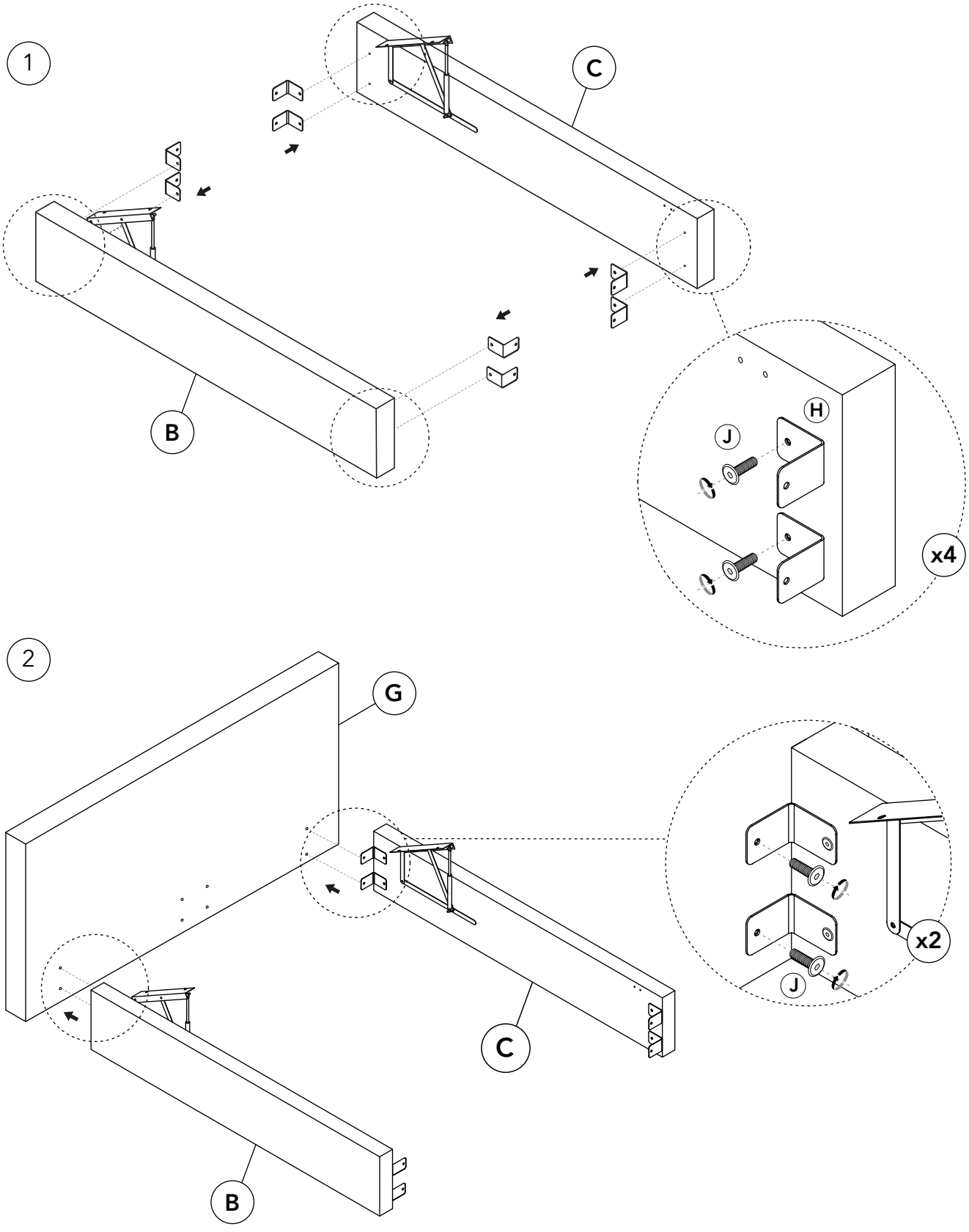
1
C
B
H
J
x4
2
G
C
B
x2
J

3

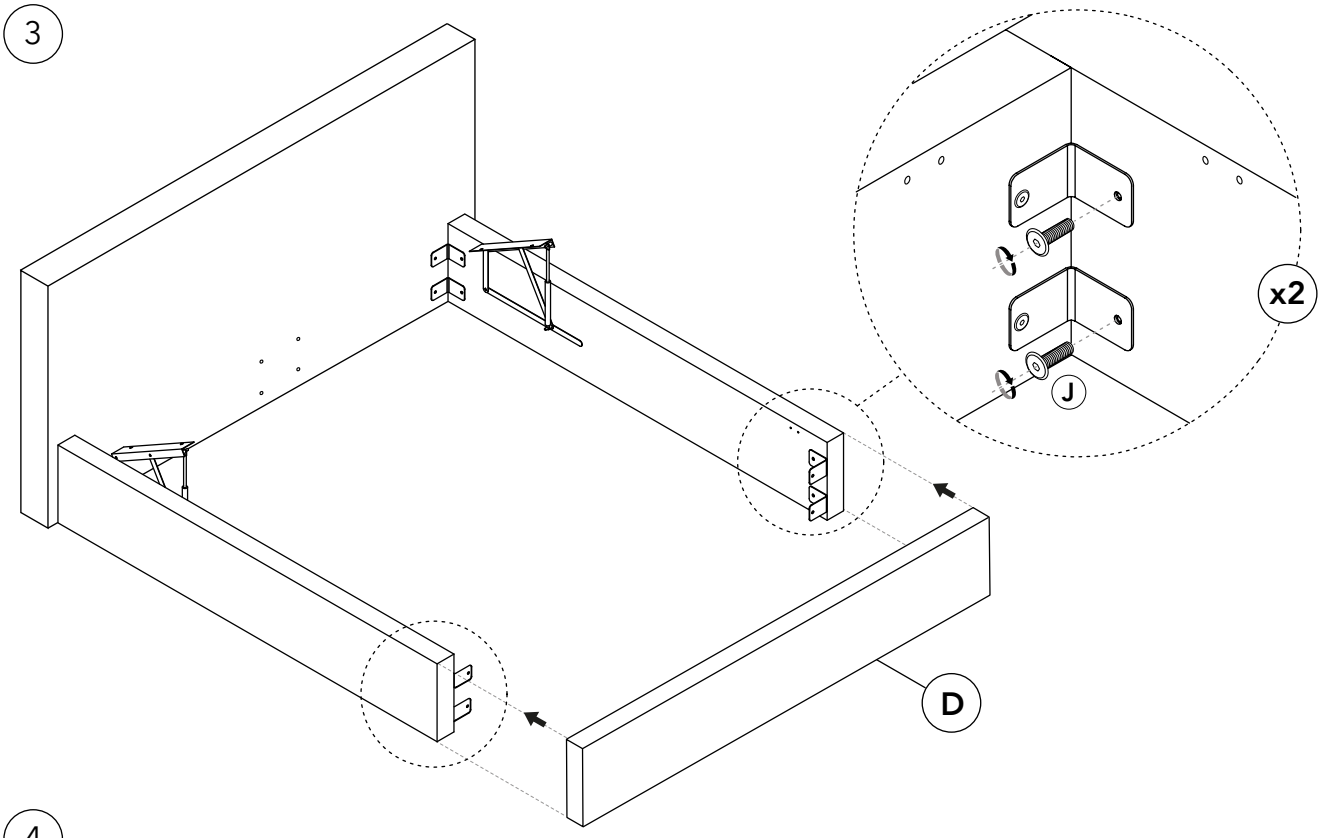

4

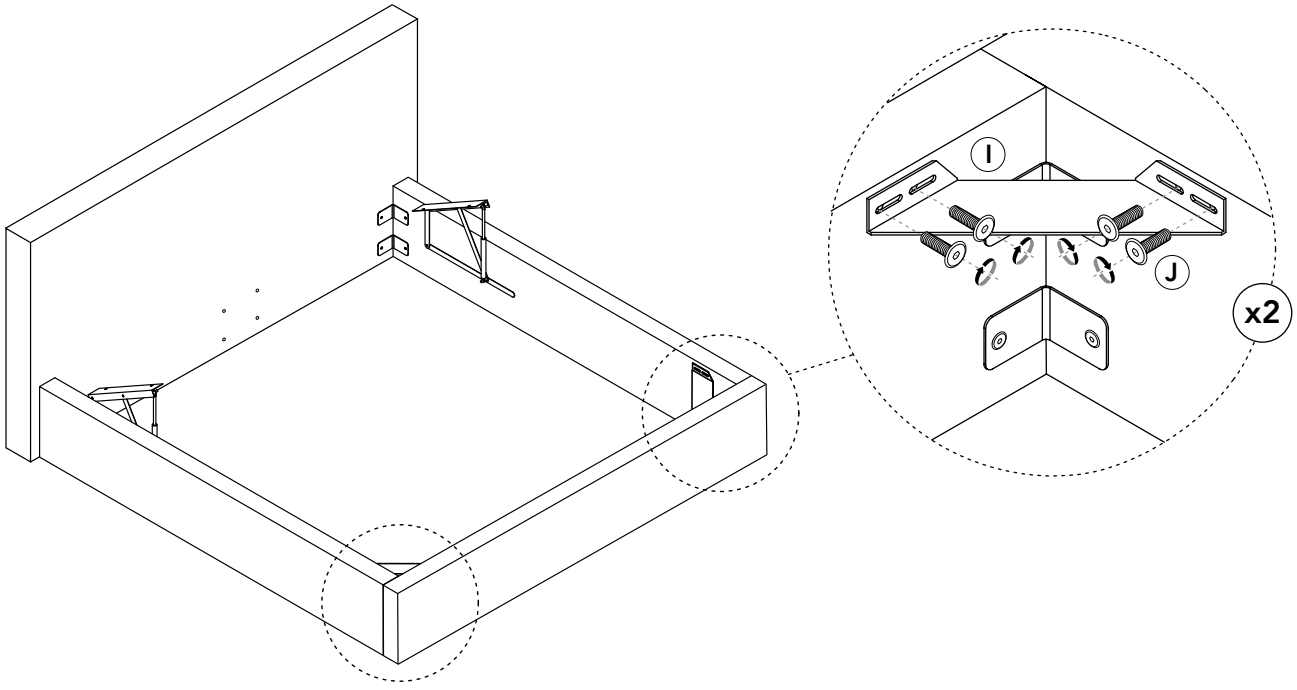

5

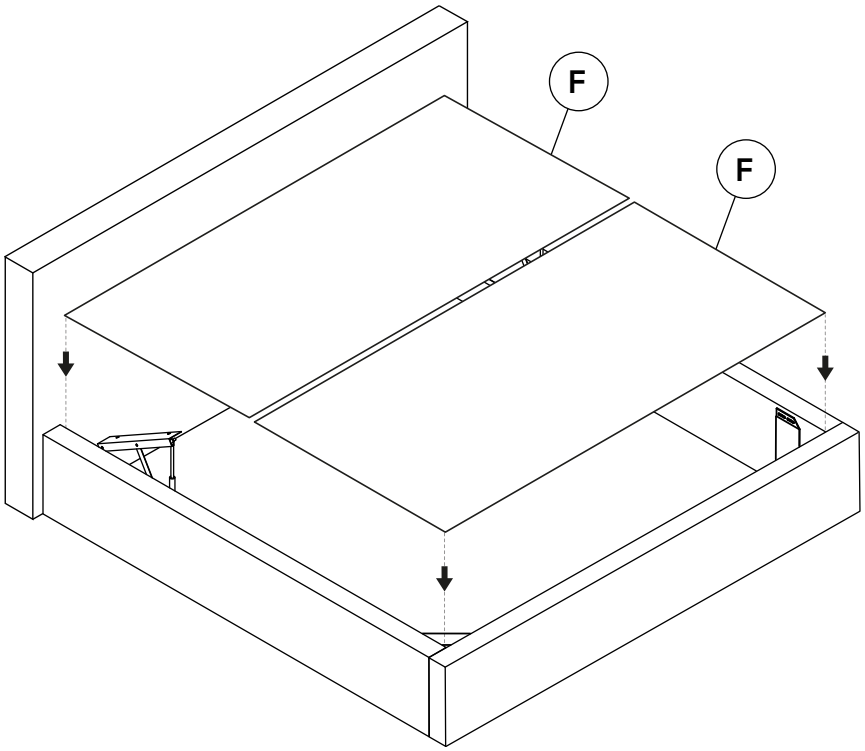

6

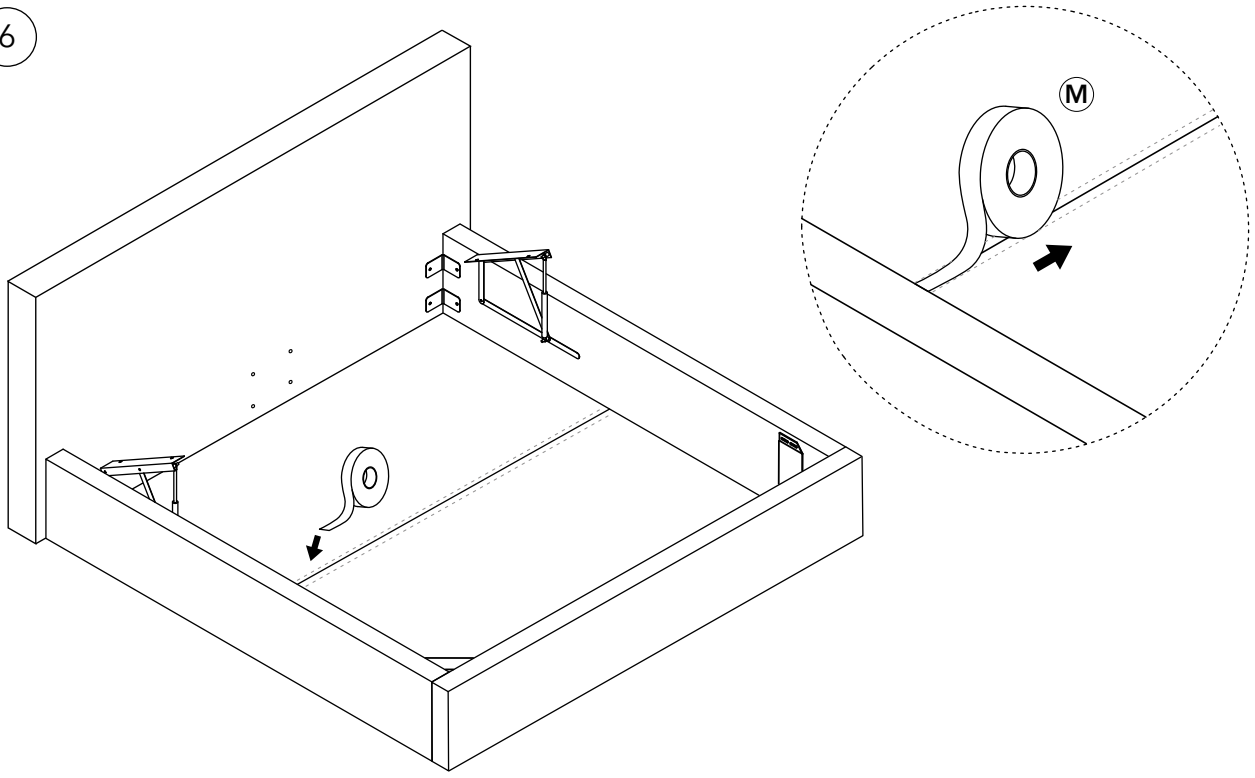

7

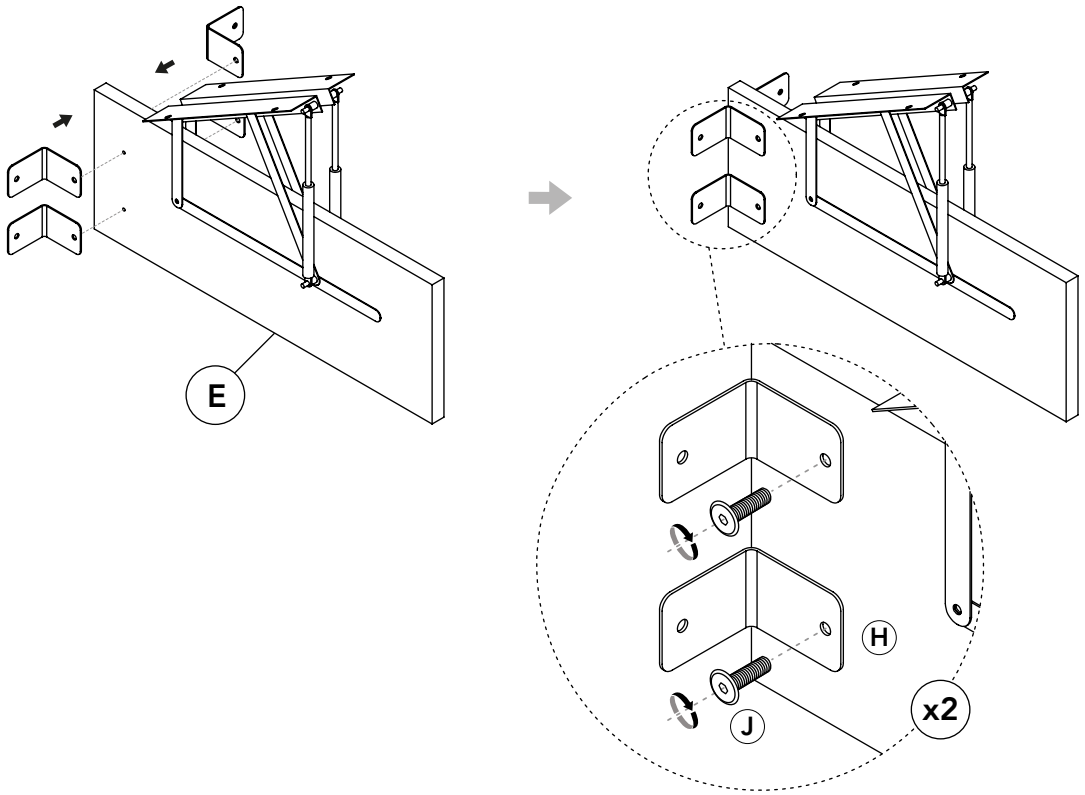

8

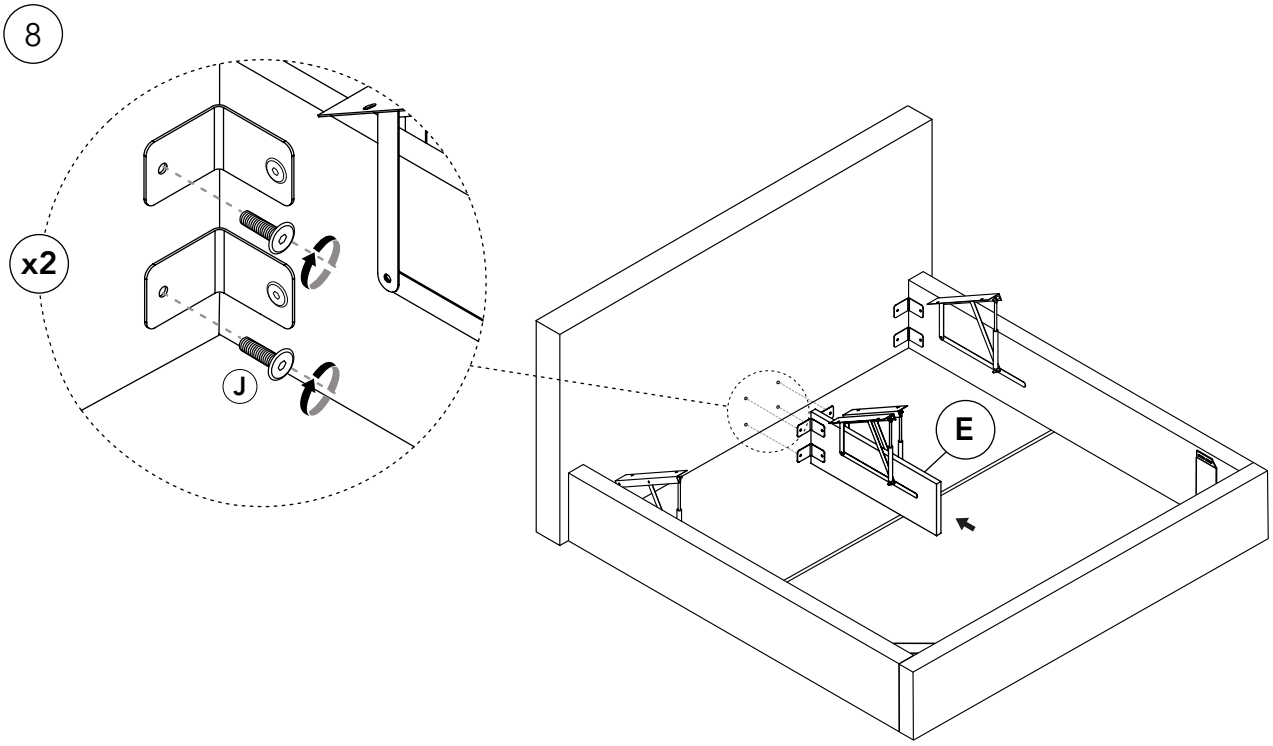

9

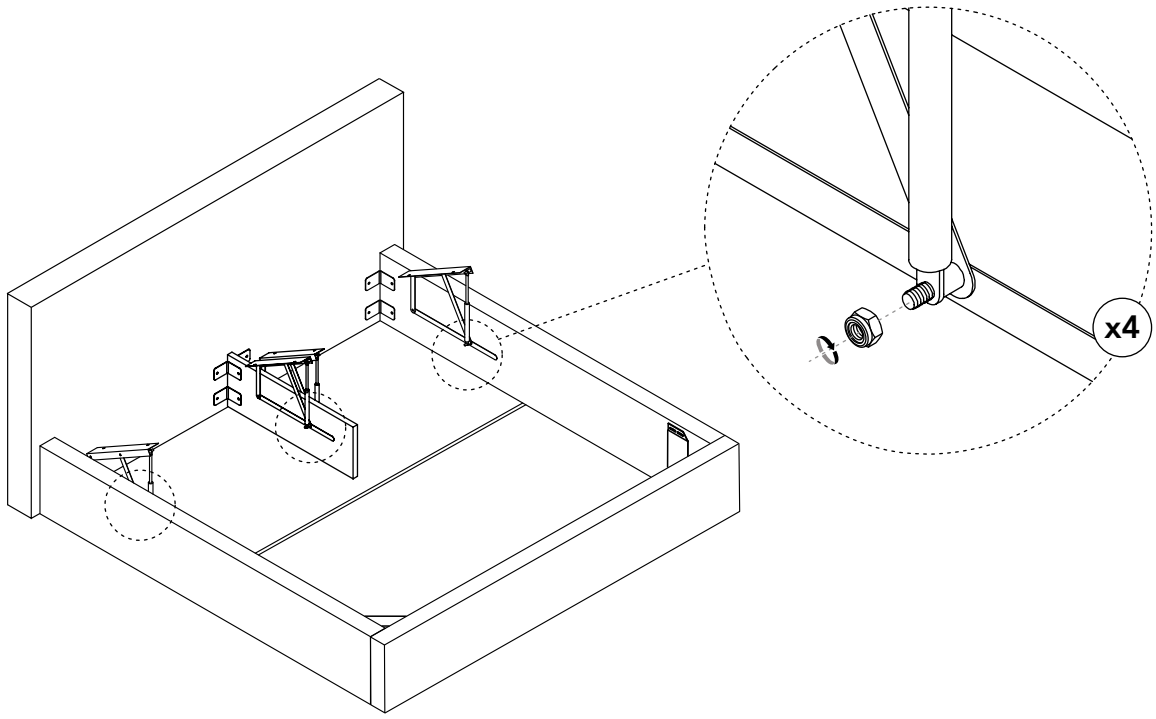

10

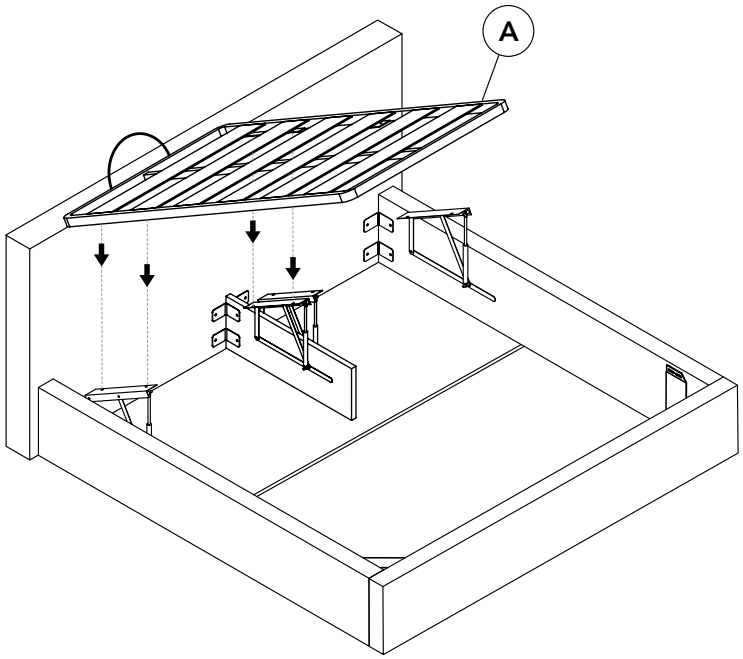

11

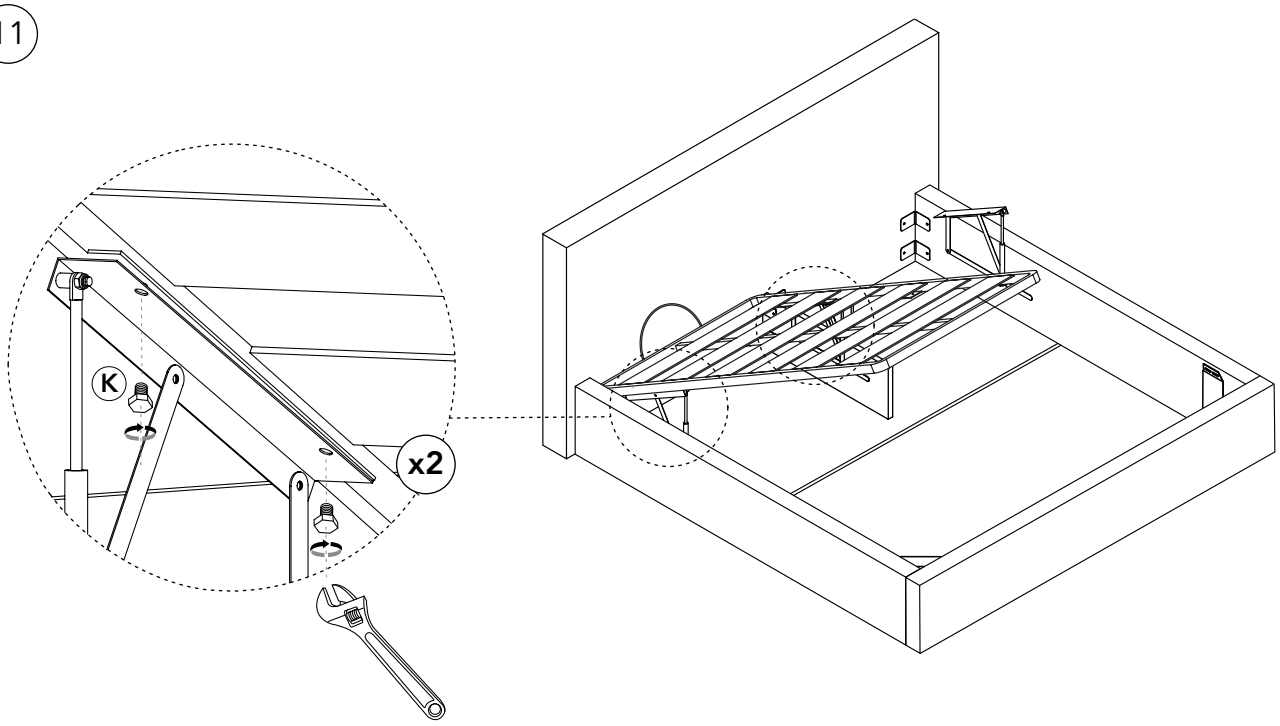

12

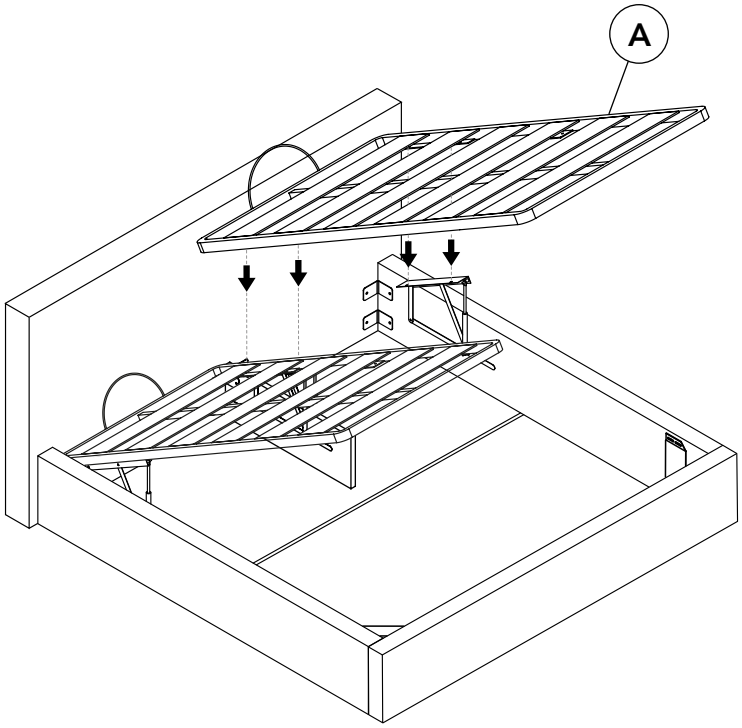

13

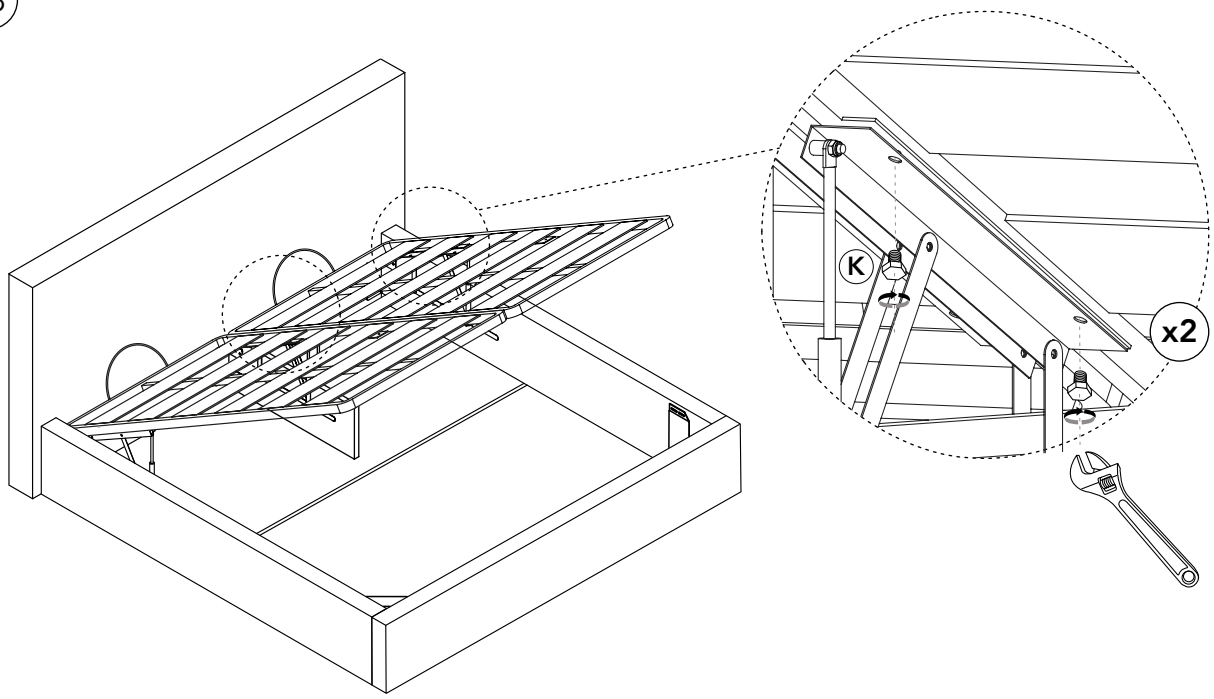

14

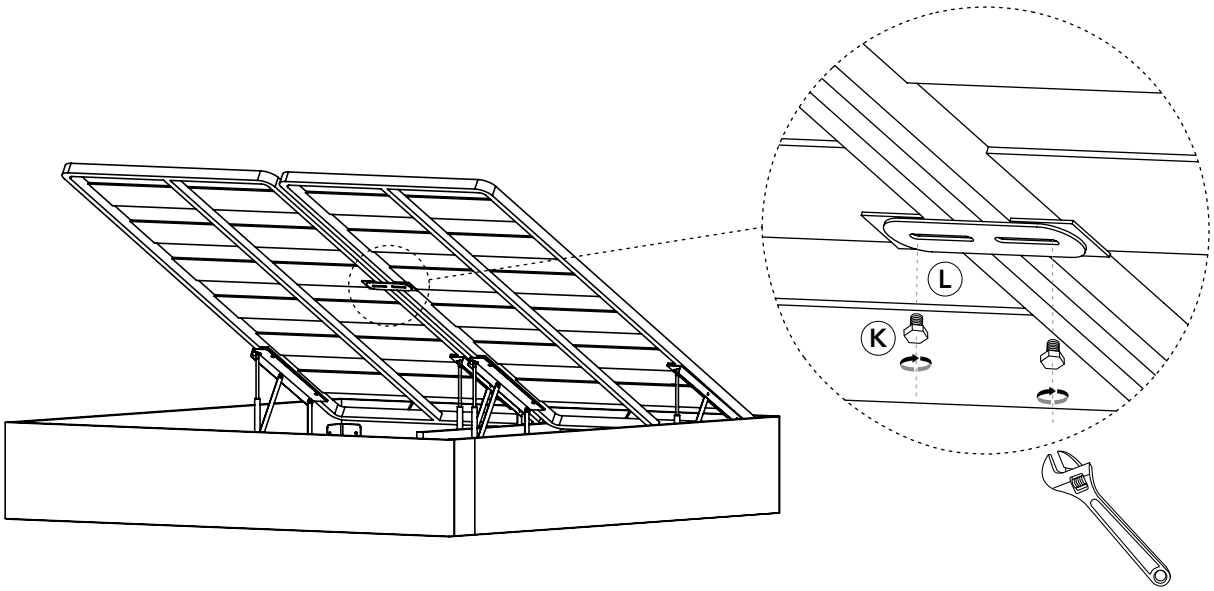

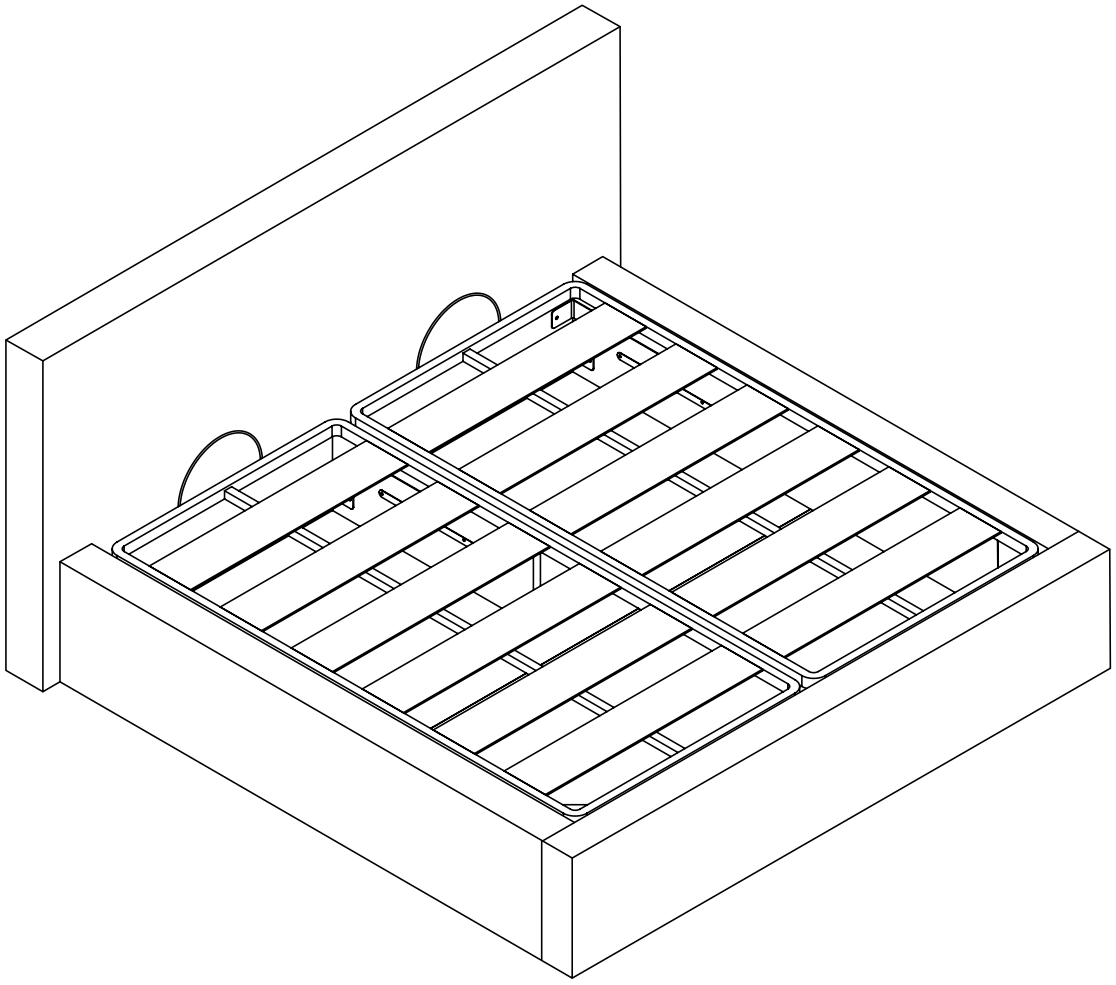

DECOWOOD®

The change starts here.

www.decowood.com